KOR-N-TEE® CONNECTOR

Lateral Connector for Concrete Pipe

Advantages of the Kor-N-Tee® Connector

- An economical, watertight seal for concrete pipe that can be installed quickly and easily without complete pipe excavation or disruption of the bedding.
- Designed for concrete pipe 12 inches and larger with lateral connectors 4 through 10 inches. The Toggle and Wedge Installation Band eliminates the need for glue, epoxy or grout when making a connection.
- Provides a flexible lateral connection that accommodates ground movement and helps prevent shear.
- Prohibits protrusion of the lateral pipe into the main line.
- Materials of construction meet or exceed ASTM C-923.

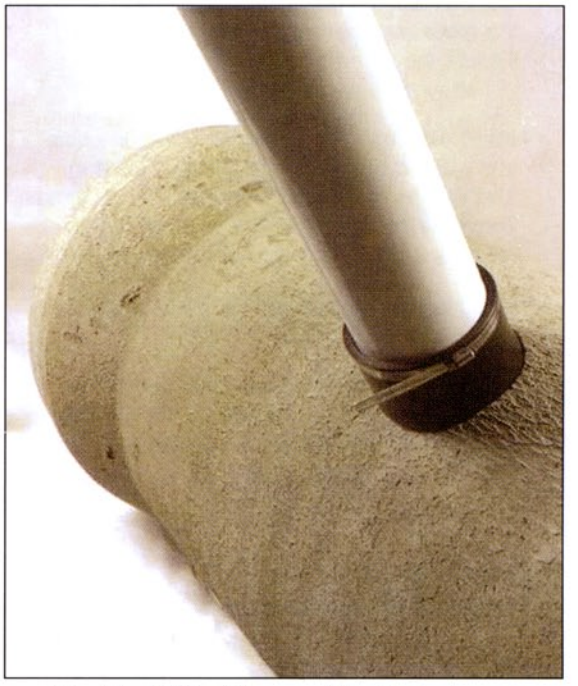

The Kor-N-Tee® is specifically designed for lateral connections in concrete pipe.

KOR-N-TEE® CONNECTOR

LATERAL PIPE-TO-PIPE CONNECTOR

Toggle Korband *Wedge Korband* *Kor-N-Tee®* *Pipe Clamp*

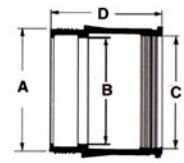

Connector[1] Model #	Lateral Pipe O.D. Range Inches [mm]	Hole / Connector Dimensions Inches				Pipe Clamp P/N	Minimum Pipe I.D. Inches	Minimum Wall Thickness Inches
		A[2]	B	C	D			
S006-5	4.125 to 4.800	4.960 to 5.010	4.000	4.500	6.0	I-80	12	2.00
S006-6	5.125 to 5.625	5.960 to 6.010	5.000	5.525	6.0	I-128	12	2.00
S006-7B	5.875 to 6.375	6.995 to 7.055	5.937	6.250	6.0	I-128	12	2.00
S006-7A	6.750 to 7.750	6.995 to 7.055	6.062	7.625	6.0	I-128	12	2.00
S006-9A	8.000 to 8.750	8.990 to 9.050	8.000	8.500	6.5	I-180	18	2.25
S006-9	8.500 to 9.875	8.990 to 9.050	8.000	9.625	8.0	I-180	18	2.25
S006-11	10.000 to 10.750	11.025 to 11.115	10.000	10.500	7.0	I-190	21	2.50

1. S006-7B currently available in toggle or wedge style. Other sizes are toggle only.
2. For coring equipment, refer to NPC Vertakor® 1200 Data Sheet.

INSTALLATION INSTRUCTIONS

- Core a hole in the main line consistent with the model number for the lateral pipe O.D. Ensure the cored hole is smooth and free of honeycomb or pitting.
- Insert the Kor-N-Tee® Assembly into the hole and expand the Wedge or Toggle Korband. The Wedge is installed using an NPC T-Handle Torque Wrench, P/N 91819 and the Toggle requires a separate expander tool (see below).
- Insert the lateral pipe until it "bottoms" on the positive stop in the Kor-N-Tee®.
- Install the Lateral Pipe Clamp in the molded groove and tighten to 60 inch pounds using P/N 80090 T-Handle Torque Wrench.

INSTALLATION TOOLS:

Manual Installation Tool for Toggle Korbands,

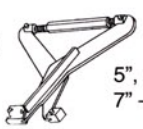

5", 6" – P/N 90349
7" – P/N 90225

T-Handle Torque Wrench, P/N 91819

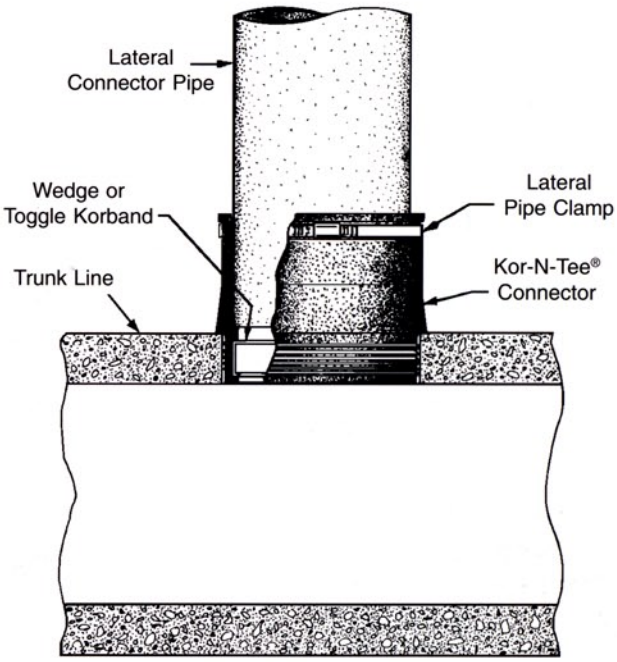

Kor-N-Tee® Cutaway

www.npc.com
250 Elm Street • P.O. Box 301
Milford, NH 03055, U.S.A.
Tel: 603-673-8680 • 800-626-2180 • Fax: 603-673-7271