shawprecastsolutions.com

SHAW PRECAST SOLUTIONS

Utility Structures

UTILITY VAULTS, TRENCHES, TRANSFORMER PADS ELECTRICAL POLE BASES AND SWITCHING CUBICLES

PRODUCT GUIDE & TECHNICAL REFERENCE MANUAL

Providing the right solutions.

UTILITY STRUCTURES

Perfect for communications, electrical, gas or steam systems, precast concrete utility structures protect the vital connections and controls for utility distribution. Precast concrete is nontoxic and environmentally safe. It resists buoyancy, making it an ideal material for use in all underground applications.

Products include: hand holes, hollowcore products, light pole bases, meter boxes, panel vaults, pull boxes, telecommunications structures, transformer pads, transformer vaults, trenches, utility buildings, utility vaults, utility poles, controlled environment vaults (CEVs) and other utility structures.

REVISED MARCH 14, 2013

1500 X 2700 X 2100 UTILITY VAULT

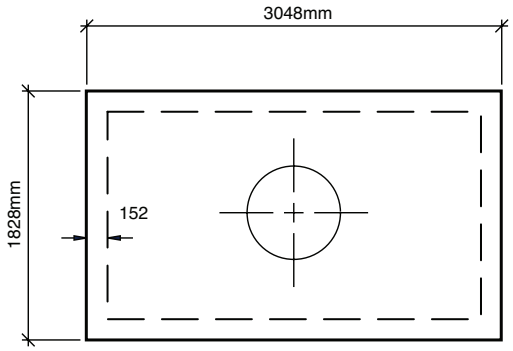

TYPICAL COVER PLAN

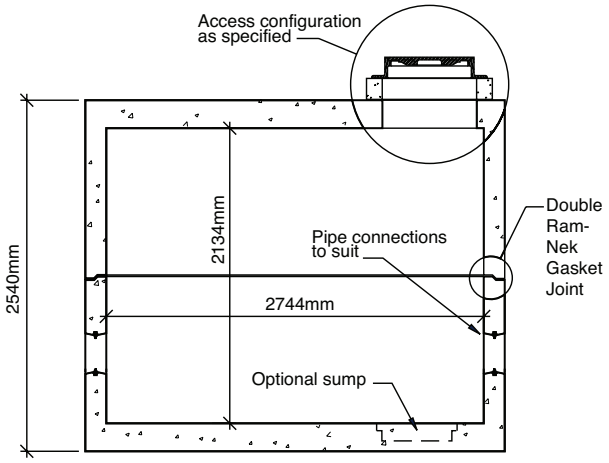

LONGITUDINAL SECTION

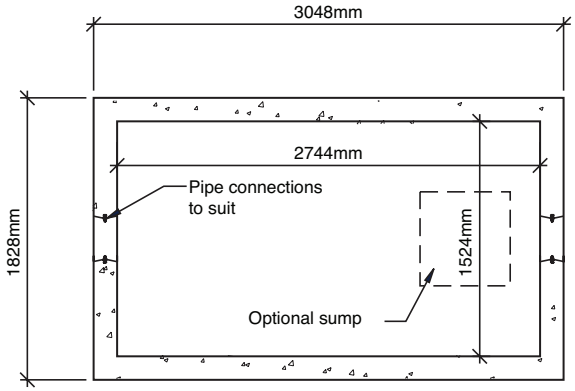

TYPICAL BASE PLAN

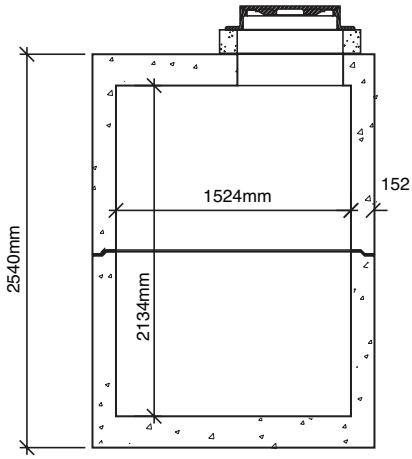

TRANSVERSE SECTION

1800 X 3600 X 2000 UTILITY VAULT

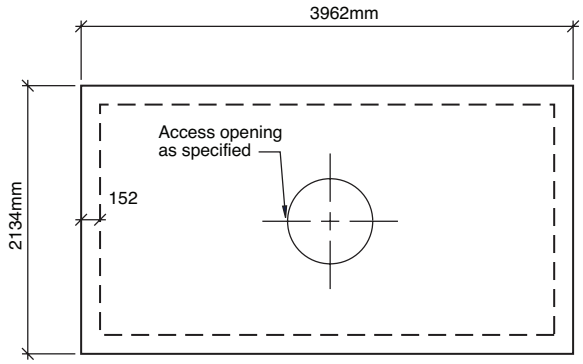

TYPICAL COVER PLAN

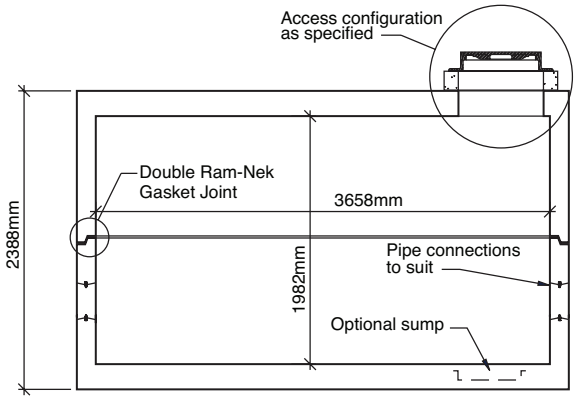

LONGITUDINAL SECTION

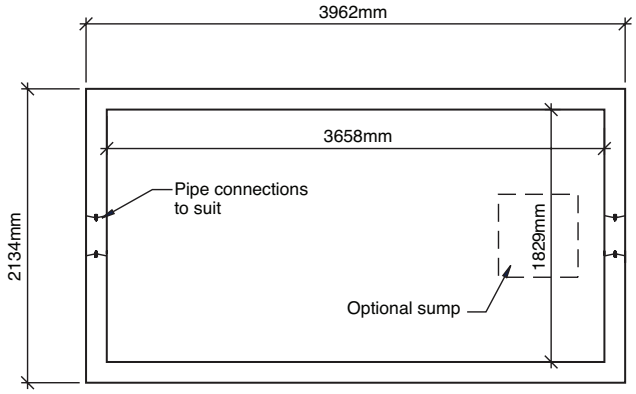

TYPICAL BASE PLAN

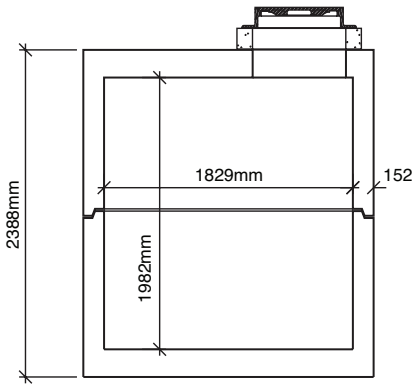

TRANSVERSE SECTION

REVISED MARCH 14, 2013

3000 x 3600 x 2100 UTILITY VAULT

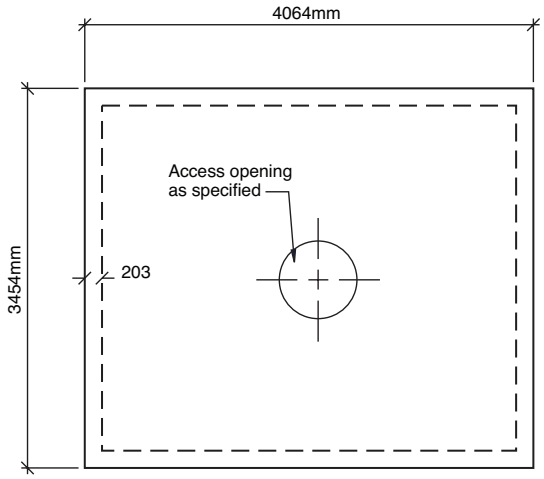

TYPICAL COVER PLAN

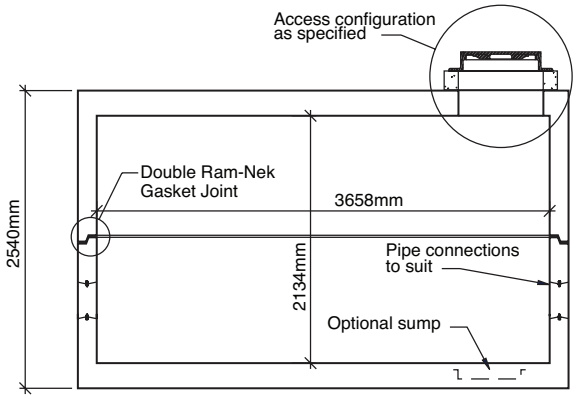

LONGITUDINAL SECTION

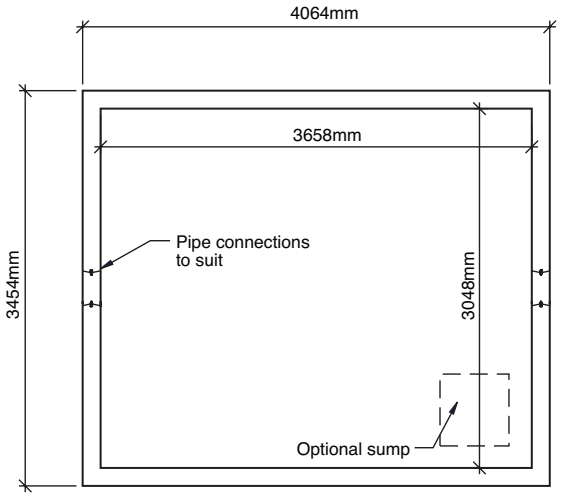

TYPICAL BASE PLAN

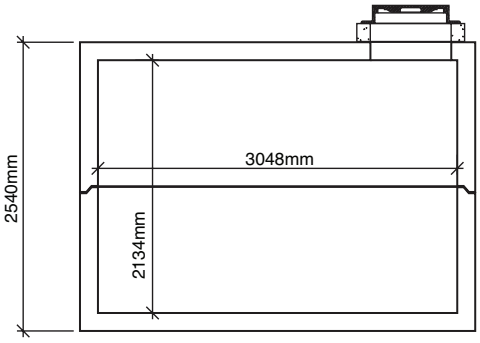

TRANSVERSE SECTION

TYPICAL CONFIGURATION FOR UNDERGROUND TELEPHONE AND ELECTRICAL DUCTS

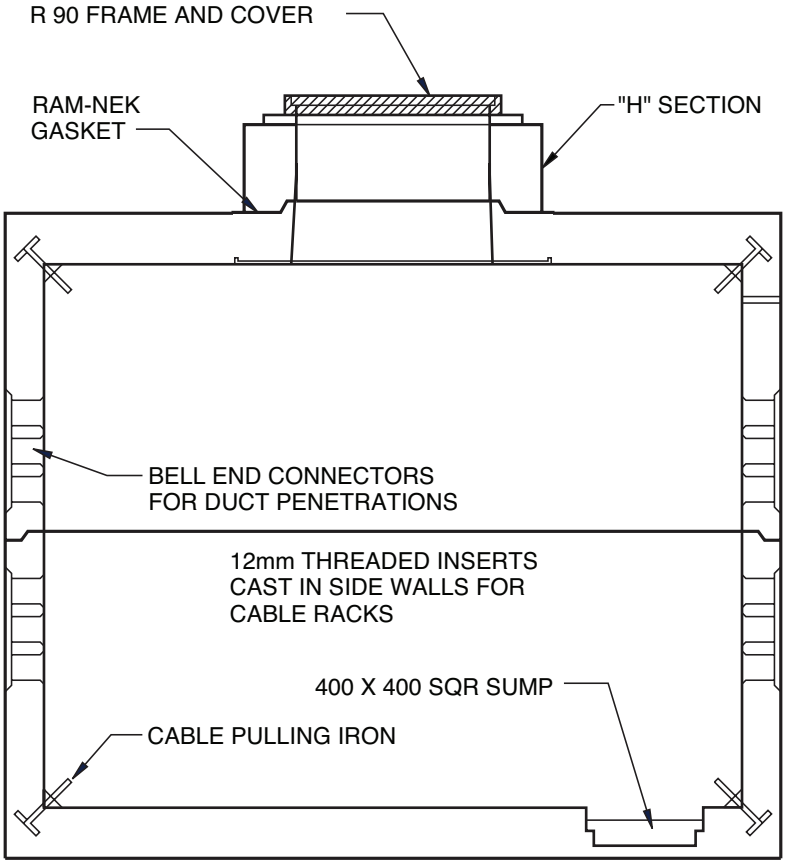

UNDERGROUND TELEPHONE AND ELECTRICAL DUCT CONFIGURATIONS ARE AVAILABLE FOR ALL SIZES OF UTILITY VAULTS

REVISED MARCH 14, 2013

1800x3600 SWITCHING CUBICLES

COVER PLAN

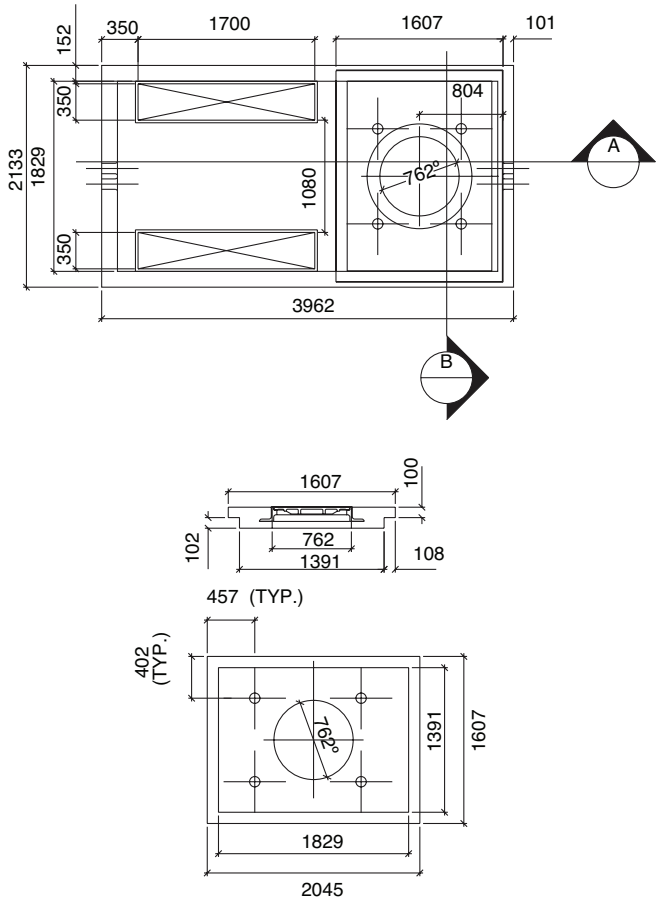

SECTION A & B

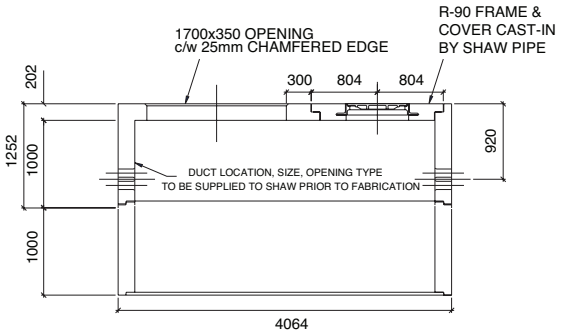

SECTION A LONGITUDINAL SECTION

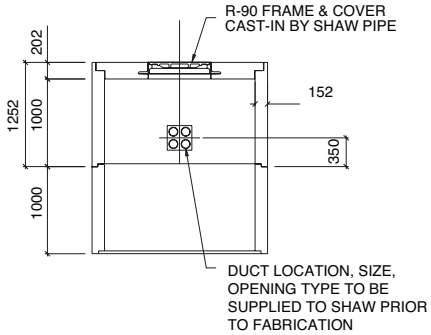

SECTION B TRANSVERSE SECTION

3000x3600 SWITCHING CUBICLES

COVER PLAN

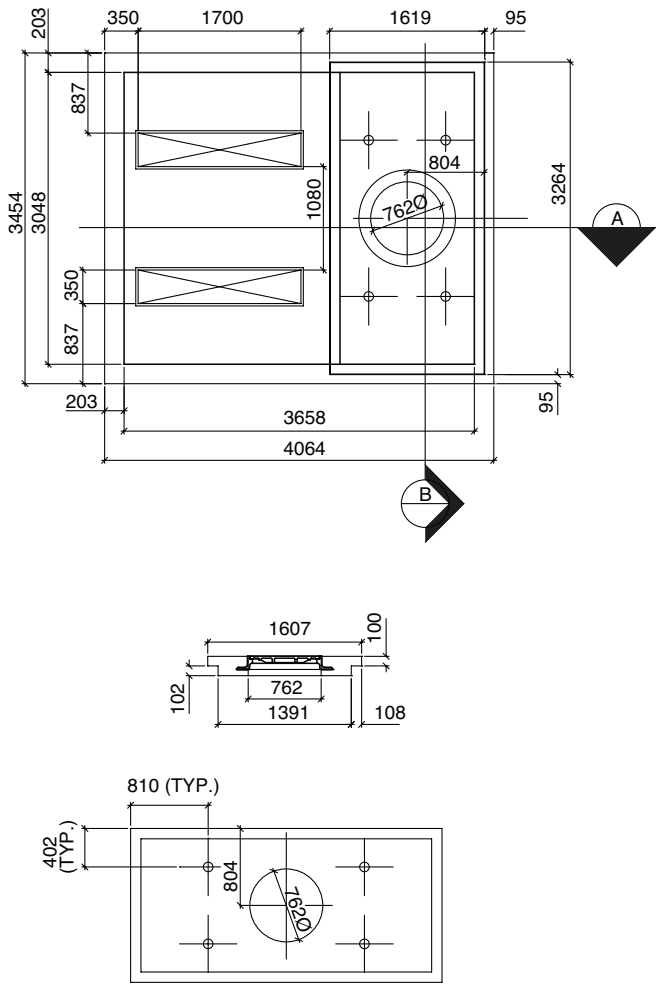

SECTION A & B

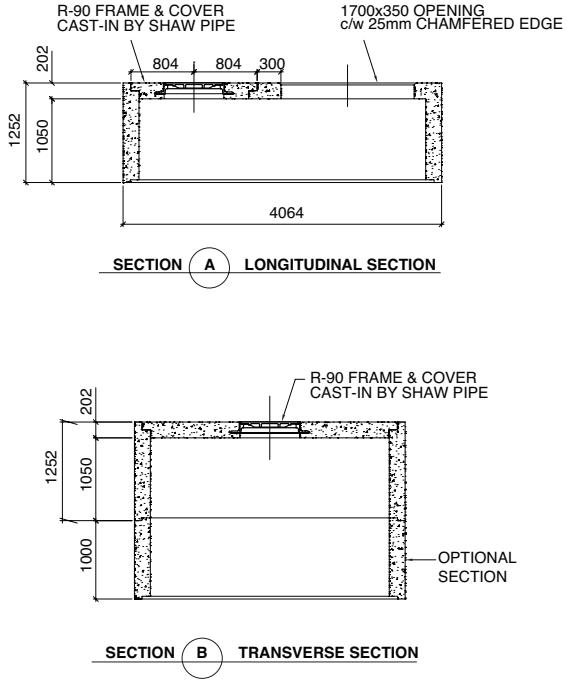

REVISED MARCH 14, 2013

ELECTRICAL POLE BASE THREE CONDUIT TYPE 1 GEOMETRY PLAN AND SECTION

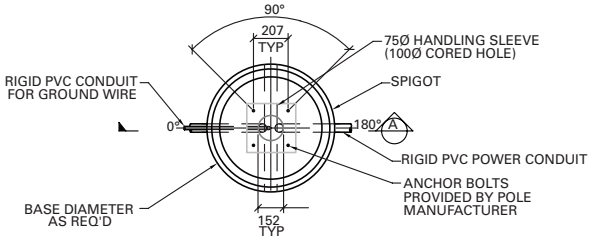

PLAN - GEOMETRY

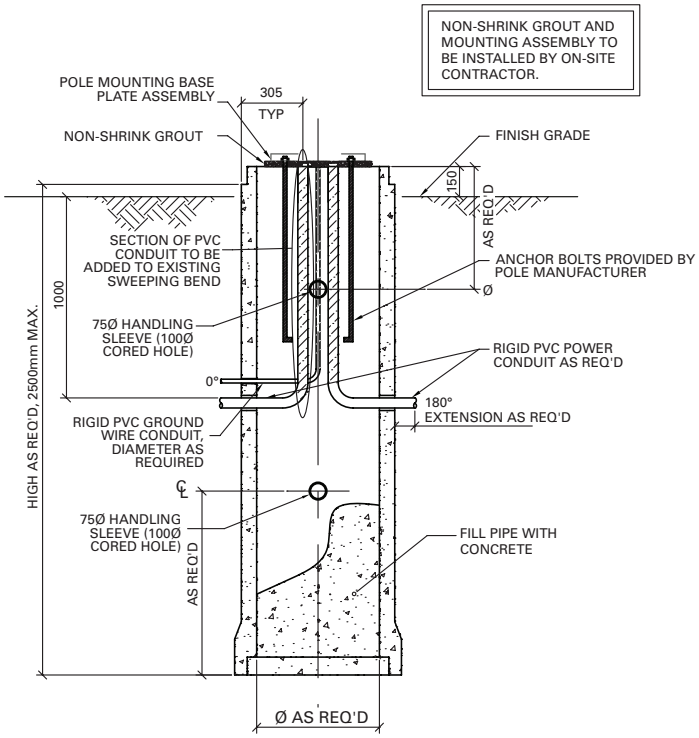

SECTION A

ELECTRICAL POLE BASE THREE CONDUIT TYPE 5 GEOMETRY PLAN AND SECTION

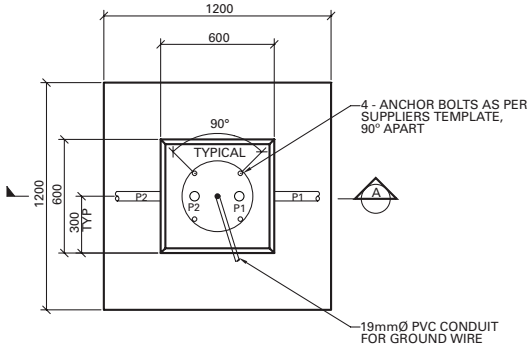

PLAN - GEOMETRY

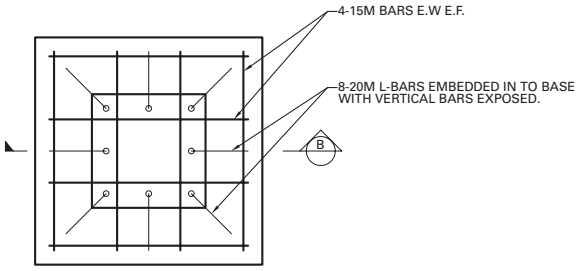

PLAN - REINFORCING

L-BARS TO BE CAST INTO BASE WITH VERTICAL LEGS EXPOSED. ONCE ANCHOR BOLTS HAVE BEEN SUPPLIED, SECOND POUR OF PEDESTAL WILL BE FORMED AROUND VERTICAL REBAR.

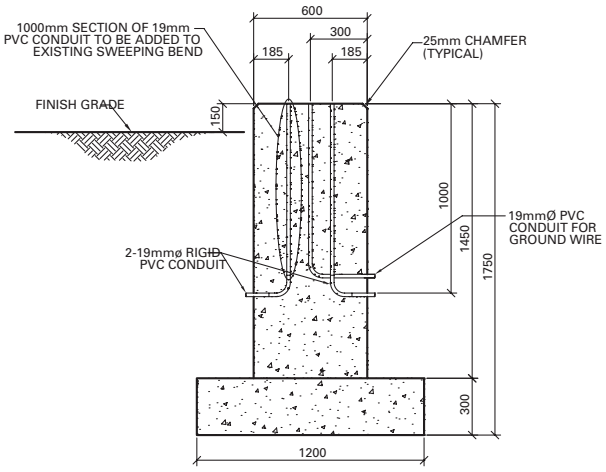

SECTION A

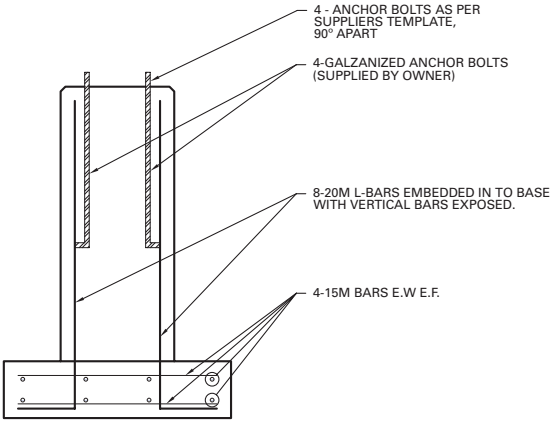

SECTION B

REVISED MARCH 14, 2013

TRANSFORMER PADS

1610x1700 SINGLE-PHASE PADMOUND TRANSFORMERS 50kV.A - 167kV.A

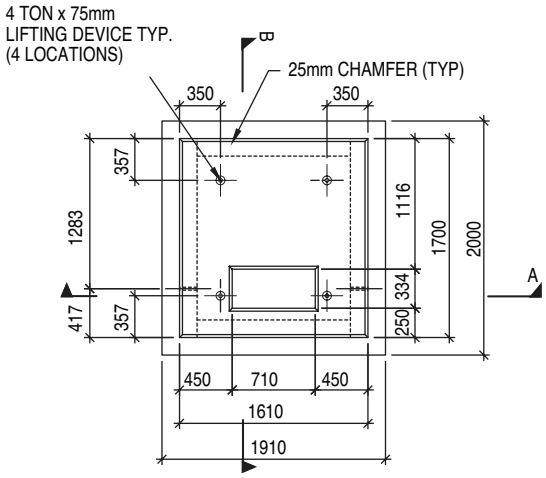

PLAN

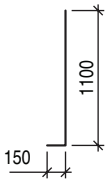

DETAIL-A

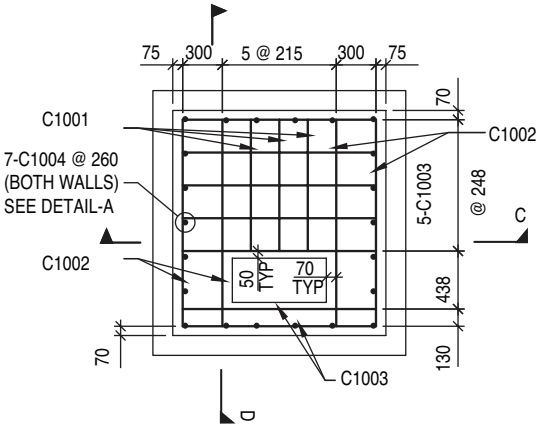

PLAN

REBAR SCHEDULE
- C1001-#10M BAR x 1010mm LG - 6 REQUIRED
- C1002-#10M BAR x 1600mm LG - 14 REQUIRED
- C1003-#10M BAR x 1500mm LG - 20 REQUIRED
- C1004-#10M BAR x 1250mm LG - 22 REQUIRED (SEE DETAIL-A)
- C1005-#10M BAR x 1760mm LG - 4 REQUIRED
- C1006-#10M BAR x 1850mm LG - 4 REQUIRED

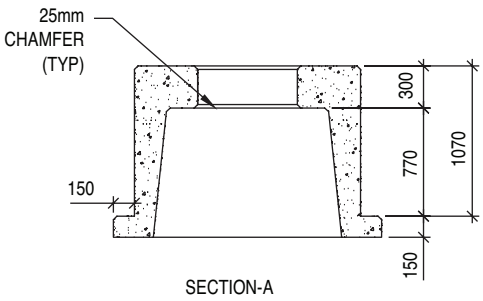

SECTION-A

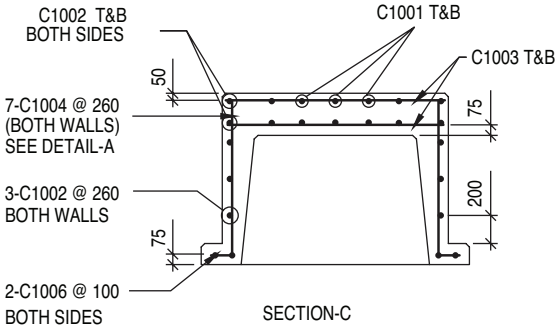

SECTION-C

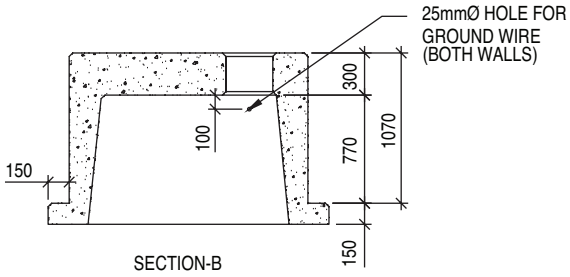

SECTION-B

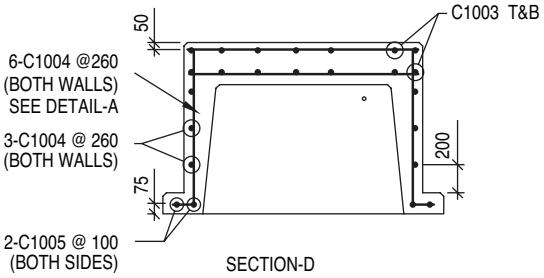

SECTION-D

TRANSFORMER PADS

1610x1450 TOP OF FIRE RESISTING BARRIER SINGLE-PHASE PADMOUNT TRANSFORMER 50kV.A-167kV.A

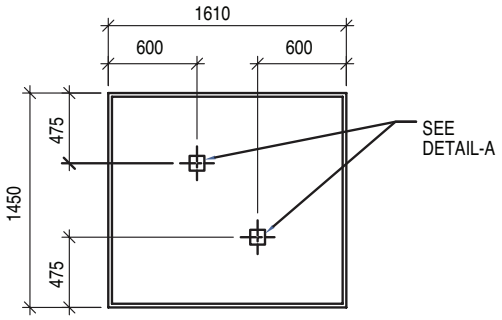

PLAN

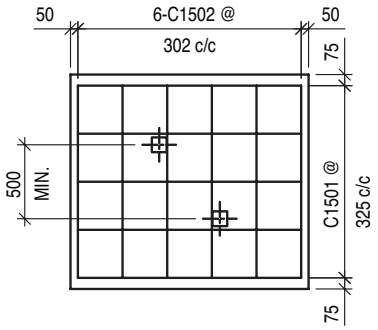

PLAN

SECTION-A

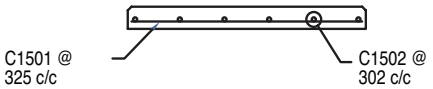

SECTION-A

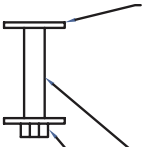

2-GALV. CHECKER PLATES 10x100x100 WELDED TO A STEEL PIPE SLEEVE (TOP & BOTTOM). CHECKER PLATES TO BE DRILLED WITH 22mmØ HOLE. TOP PLATE AND CONCRETE TO BE FLUSH.

25.4mmØ (SCHEDULE 40) GALV STEEL PIPE SLEEVE

19.1mmØ COARSE-THREAD NUT TO BE WELDED TO BOTTOM PLATE

DETAIL-A

REBAR SCHEDULE

C1501-#15M BAR x 1500mm LG - 5 REQUIRED

C1502-#15M BAR x 1350mm LG - 6 REQUIRED

REVISED MARCH 14, 2013

TRANSFORMER PADS

2400x2200 THREE-PHASE PADMOUNT TRANSFORMERS 150kV.A - 500kV.A

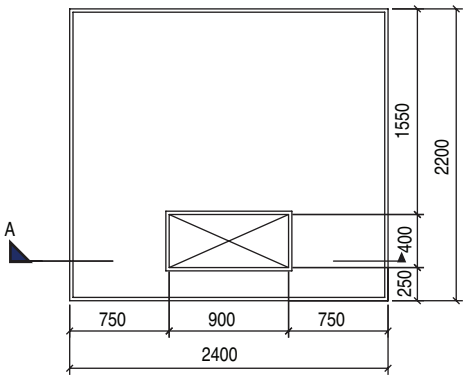

PLAN
GEOMETRY

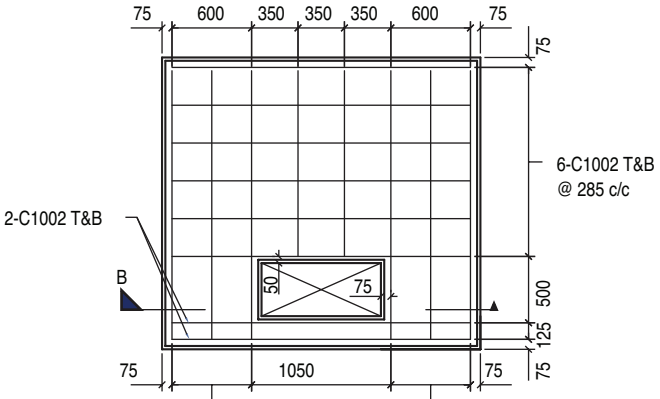

PLAN
REINFORCING

REBAR SCHEDULE
C1001 - #10M BAR X 2100mm LG - 12 REQUIRED
C1002 - #10M BAR X 2300mm LG - 16 REQUIRED
C1003 - #10M BAR X 1450mm LG - 4 REQUIRED

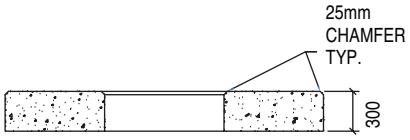

SECTION A
GEOMETRY

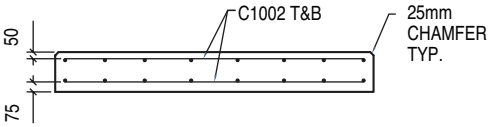

SECTION B
REINFORCING

TRANSFORMER PADS

2400x1820 TOP OF FIRE RESISTING BARRIER THREE-PHASE PAD MOUNT

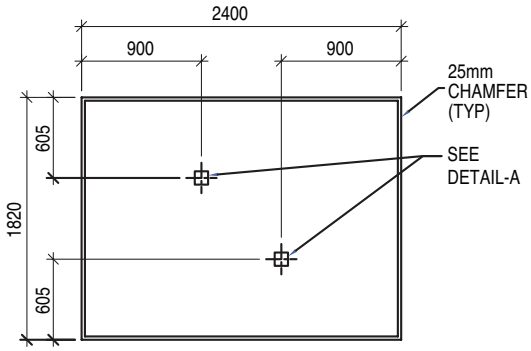

PLAN

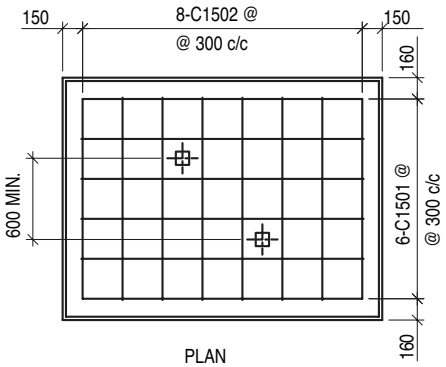

PLAN

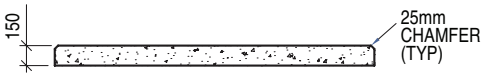

SECTION-A

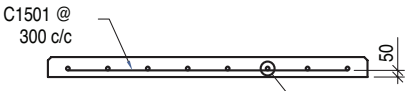

SECTION-A

2-GALV. CHECKER PLATES 10x100x100 WELDED TO A STEEL PIPE SLEEVE (TOP & BOTTOM). CHECKER PLATES TO BE DRILLED WITH 22mmØ HOLE. TOP PLATE AND CONCRETE TO BE FLUSH.

25.4mmØ (SCHEDULE 40) GALV STEEL PIPE SLEEVE

DETAIL-A

19.1mmØ COARSE-THREAD NUT TO BE WELDED TO BOTTOM PLATE

REBAR SCHEDULE

C1501-#15M BAR x 2300mm LG - 6 REQUIRED

C1502-#15M BAR x 1600mm LG - 8 REQUIRED

REVISED MARCH 14, 2013

TRANSFORMER PADS

3000x3000 THREE-PHASE PADMOUNT TRANSFORMER 750kV.A-2500kV.A

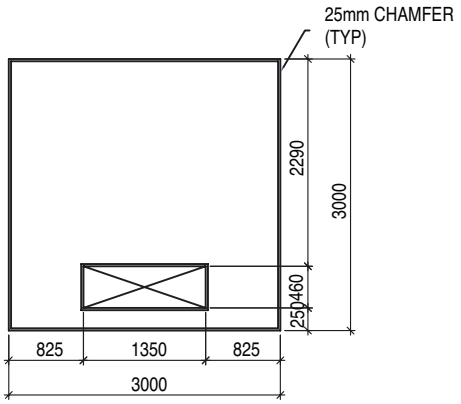

PLAN

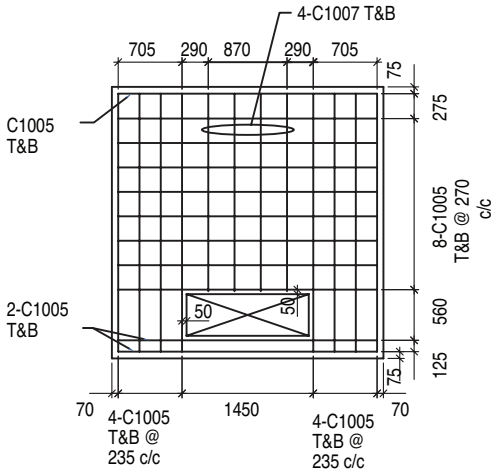

PLAN

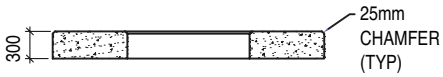

SECTION-A

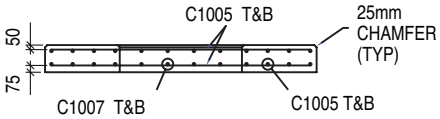

SECTION-A

REBAR SCHEDULE
C1005-#10M BAR x 2900mm LG - 38 REQUIRED
C1007-#10M BAR x 2190mm LG - 8 REQUIRED

TRANSFORMER PADS

THREE PHASE PADMOUNT TRANSFORMER 750kV.A - 2500kV.A DEEP WELL DESIGN OVERALL GEOMETRY

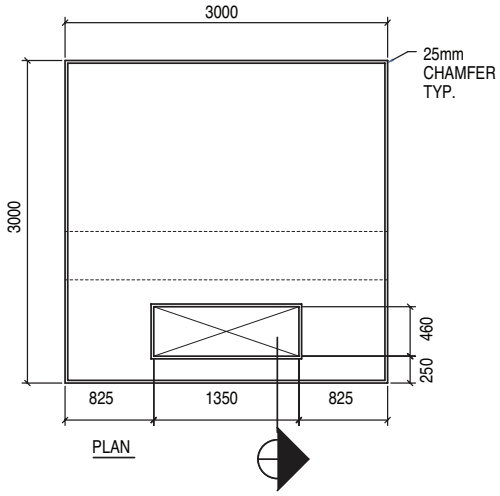

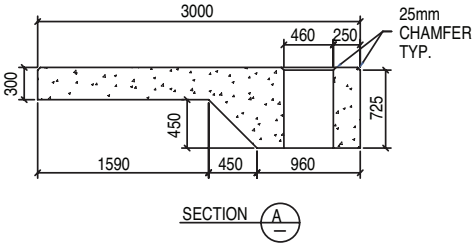

THREE PHASE PADMOUNT TRANSFORMER 750kV.A - 2500kV.A DEEP WELL DESIGN STANDARD REINFORCING

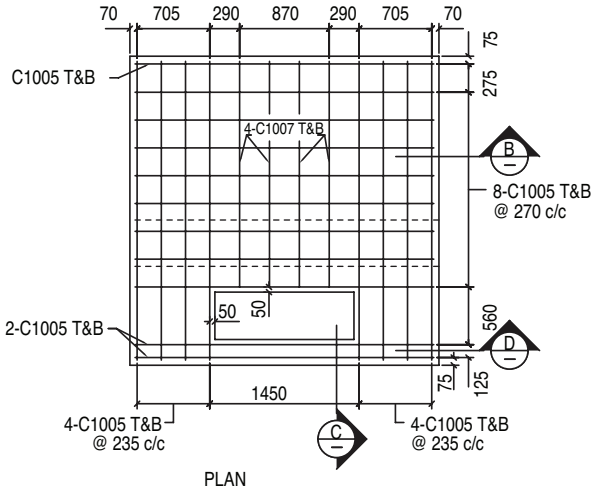

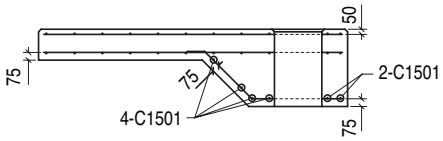

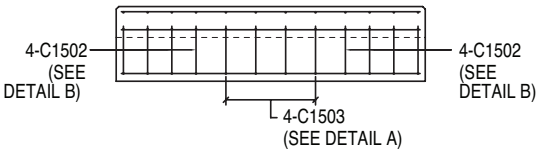

REBAR SCHEDULE

C1005 - 10M BAR x 2900mm LG - 38 REQ'D
C1007 - 10M BAR x 2190mm LG - 8 REQ'D
C1501 - 15M BAR x 2900mm LG - 6 REQ'D
C1502 - 15M BAR x 1700mm LG - 8 REQ'D
C1503 - 15M BAR x 990mm LG - 4 REQ'D

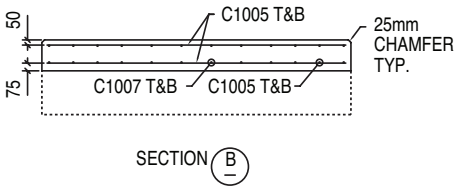

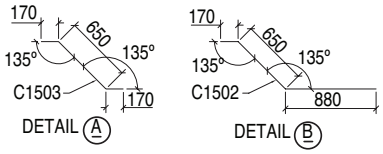

REVISED MARCH 14, 2013

TRANSFORMER PADS

3000x2720 TOP OF FIRE RESISTING BARRIER THREE-PHASE PADMOUNT TRANSFORMER 750kV.A-2500kV.A GENERAL ARRANGEMENT

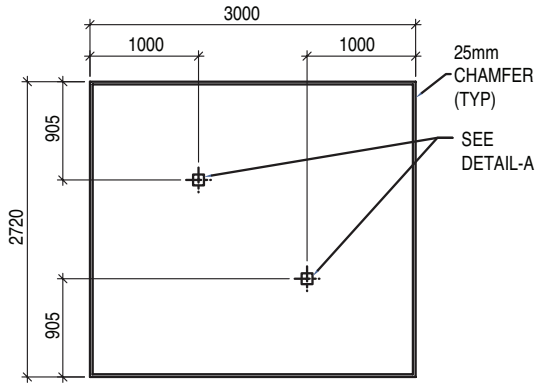

PLAN

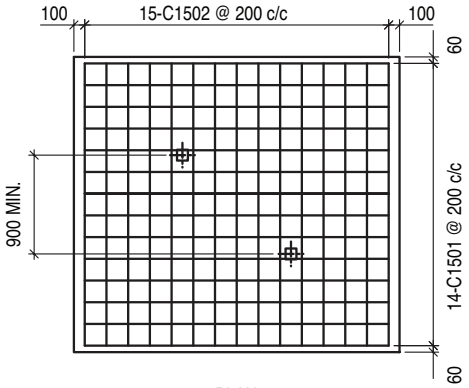

PLAN

SECTION-A

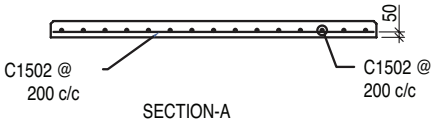

SECTION-A

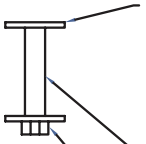

2-GALV. CHECKER PLATES 10x100x100 WELDED TO A STEEL PIPE SLEEVE (TOP & BOTTOM). CHECKER PLATES TO BE DRILLED WITH 22mmØ HOLE. TOP PLATE AND CONCRETE TO BE FLUSH.

25.4mmØ (SCHEDULE 40) GALV STEEL PIPE SLEEVE

19.1mmØ COARSE-THREAD NUT TO BE WELDED TO BOTTOM PLATE

DETAIL-A

REBAR SCHEDULE
C1501-#15M BAR x 2800mm LG - 14 REQUIRED
C1502-#15M BAR x 2500mm LG - 15 REQUIRED

1000 x 1300 UTILITY BOX
CS700

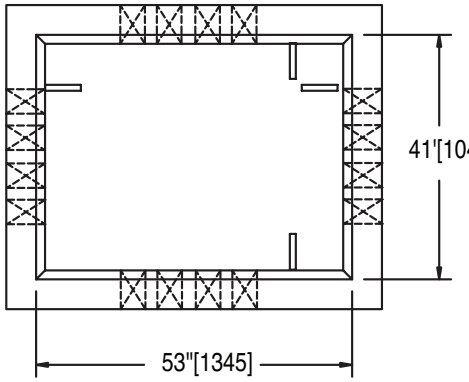

PLAN VIEW
W/OUT COVER

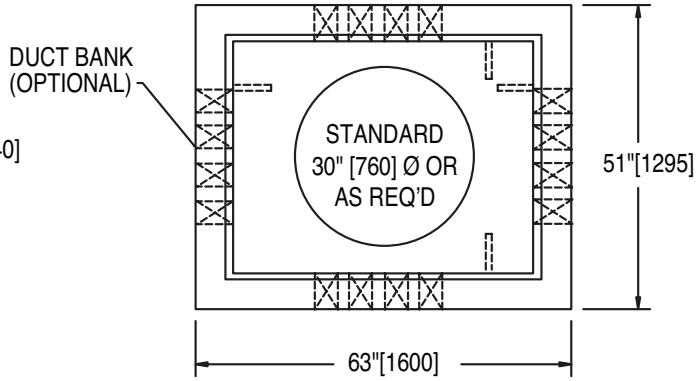

PLAN VIEW

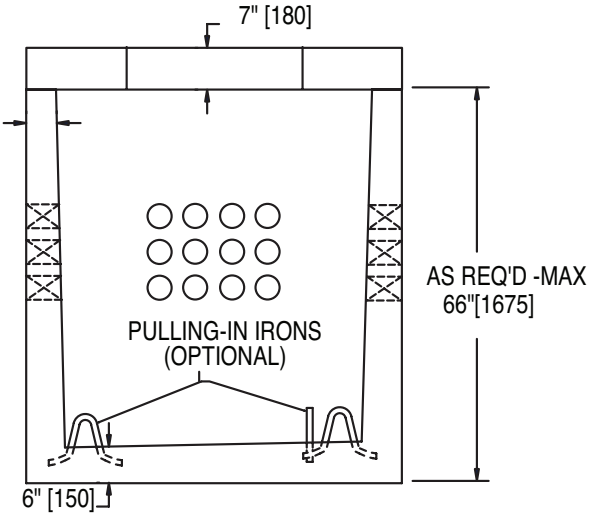

SECTION
THRU CENTERLINE

SPECIFICATIONS:

- Concrete Minimum Strength: 5000psi [35MPa] at 28 days
- Air Entraining: 5 - 7%
- Steel Reinforcement: For HS-25
- Construction Joint: Sealed with butyl rope or equivalent
- Design for HS-25 Load at 2'[600] Bury

NOTES:

- Grade Rings Available For Increased Depth of Bury
- Accessories Holes as Required

REVISED MARCH 14, 2013

SHAW PRECAST SOLUTIONS

AVAILABLE TRENCH SIZES:

RISE		SPAN														
		2ft	3ft	4ft	5ft	6ft	7ft	8ft	9ft	10ft	11ft	12ft	13ft	14ft	15ft	16ft
		610 mm	914 mm	1219 mm	1524 mm	1829 mm	2134 mm	2438 mm	2743 mm	3048 mm	3353 mm	3658 mm	3962 mm	4267 mm	4572 mm	4877 mm
16ft	4877 mm															
15ft	4572 mm															
14ft	4267 mm															
13ft	3962 mm															
12ft	3658 mm															
11ft	3353 mm															
10ft	3048 mm															
9ft	2743 mm															
8ft	2438 mm															
7ft	2134 mm															
6ft	1829 mm															
5ft	1524 mm															
4ft	1219 mm															
3ft	914 mm															
2ft	610 mm															

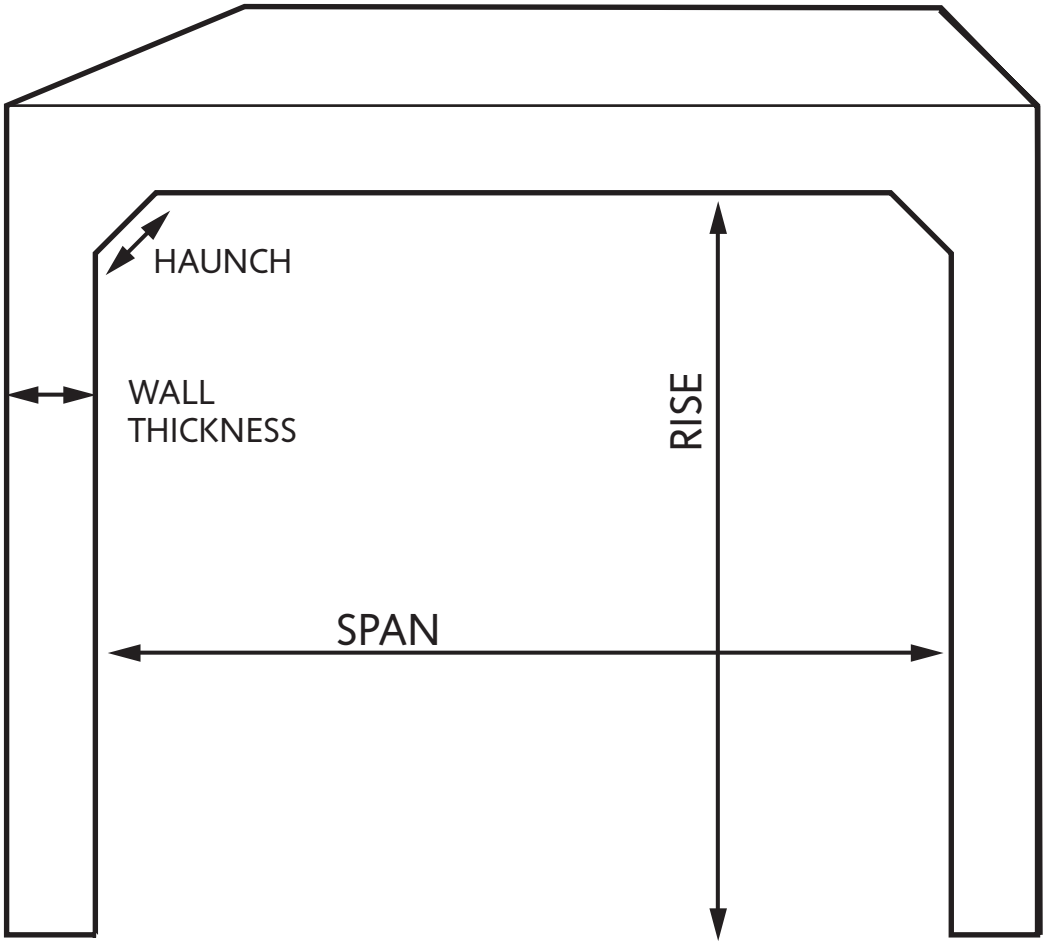

IMPORTANT NOTES:

Available Haunch Sizes are: 6 inch (152mm), 8 inch (203mm) and 12 inch (305mm)

Span and Rise are available in increments of 4 inches (102mm)
For example, 6 ft 8 inch x 8 ft 4 inch (2032mm x 2540mm)

Wall thicknesses are available in 2 inch (51mm) increments
For example, 2 inch, 4 inch, 6 inch, etc...

Haunch Size	Min. Rise	Min. Span
6 inch	2 ft	3 ft
8 inch	3 ft	3 ft
12 inch	4 ft	4 ft