shawprecastsolutions.com

SHAW PRECAST SOLUTIONS

Manholes

PRODUCT GUIDE & TECHNICAL REFERENCE MANUAL

Providing the right solutions.

CONCRETE MANHOLES

Shaw Precast Solutions produces circular, precast, concrete manholes in diameters 1050mmØ through 3600mmØ. Precast, concrete manholes are most frequently used for pipeline and sewer entry and are easy to install and low in cost.

Shaw Precast Solutions follows various standards and specifications in the production of precast, concrete manhole units. These standards and specifications are listed in the "Specifications" section.

Typical precast, concrete manhole configurations consist of a precast base or tee base, intermediate rings, flat top cover or eccentric cone top section, grade rings and cast iron frame and cover. Large diameter manholes or rectangular manholes can be precast upon request.

HOW TO READ SHAW PRECAST SOLUTIONS MANHOLE SHOP DRAWINGS

To manufacture a manhole for a specific project, certain information is required to develop shop drawings which are used by our production and shipping staff to manufacture and deliver the appropriate pieces which make up the manhole.

Information which is necessary to develop a shop drawing normally comes from a set of engineering drawings containing a plan and profile of the sewer line. The minimum amount of information to determine required manhole layout:

- Finished Grade Elevation (or top of concrete cover if manhole extends above grade)
- Size and type of pipe entering the manhole (nominal diameter and pipe material)
- All pipe inverts (elevation at inside bottom of the pipe taken at the manhole wall)
- Angles between piping (measured clockwise from the outlet pipe which is taken as 0°)
- Size of manhole (nominal inside diameter)

Additional information which should be provided would include:

- Sump depth (if required)
- Base configuration (with or without benching, with or without bottom slab)
- Opening type (water tight rubber gasket, smooth or rough cut hole, doghouse opening.)
- Gasket type for joints / confined rubber o-ring, "Ram-Nek" butyl rubber strip, no gasket
- Special allowances for grade adjustment
- Type of access hatch or cover to be used (cast iron frame and cover, aluminum access hatch, etc.)
- Size and location of access opening in concrete cover
- Special items to be cast into manhole sections (lifting davits, access frames, tie downs)

Once this information has been received, a standard shop drawing form is filled out for each manhole in the project.

First, the total height of the manhole (laid height) is determined, by calculating the difference in elevation between the top of concrete cover and the lowest pipe invert (or bottom of sump). The top of concrete cover elevation is typically set as 300mm below finished grade, to provide an allowance for final grade adjustment once the manhole has been installed.

Next, the pipe angles, size and type are determined and laid out. Angles and pipe inverts are checked to ensure sufficient clearance between adjacent pipes. All angles are measured clockwise from the outlet opening which is taken to be 0 degrees. For a manhole with two or more inlet pipes, the angle for each pipe relative to the outlet is determined.

Next, the distance to the center of each pipe opening is determined (+ to CL). All distances are measured from the outside bottom of the manhole section in which the opening is located. Typically all openings are in the base section, unless there is a large change in elevation between pipes. If this is the case, the height of the base section, and intermediate sections will be adjusted to ensure that there is sufficient clearance between the opening and the manhole joints.

Finally, the manhole sections are selected and listed, giving the laid height of each piece and any special requirements for each section. Opening types are listed for each pipe, and any special instructions are noted.

Unless otherwise specified, shop drawings are sent to the contractor for review and approval by the project engineer. Any revisions required by the engineer or contractor are made, then the final approved shop drawings are issued to our production staff for fabrication.

REVISED DECEMBER 24, 2012

SHAW PRECAST SOLUTIONS
shawprecastsolutions.com

1 Shaw Dr.
1101 Highway #2
P.O. Box 2130
Lantz, NS B2S 3G4
(902) 883-2201 phone
(902) 883-1273 fax

Structure: MANHOLE DRAWING
Job Number:
Job Name: JOB NAME
Job Location: JOB LOCATION

Specification: 1050mm Dia Manhole
Contractor: CONTRACTOR NAME
Based on:

Design Build Height		
Top of Casting	+	4.000m
Outlet Invert	-	0.000m
Design Height	**=**	**4.000m**

Stack Build Height		
Ring	+	0.270m
Adjustment	+	0.178m
Eccentric Slab	+	0.175m
Risers	+	2.500m
Base Gain	+	0.877m
Design Height	**=**	**4.000m**
Floor Thickness	+	0.231m
Outside Height	**=**	**4.231m**

Produced By:	
Checked By:	
Frame/Ring:	C56 Adjustable
Grate/Cover:	IMP R10 COVER
Channel:	3-Way Bench Half Height
Notes:	

Elevation (View A-A)

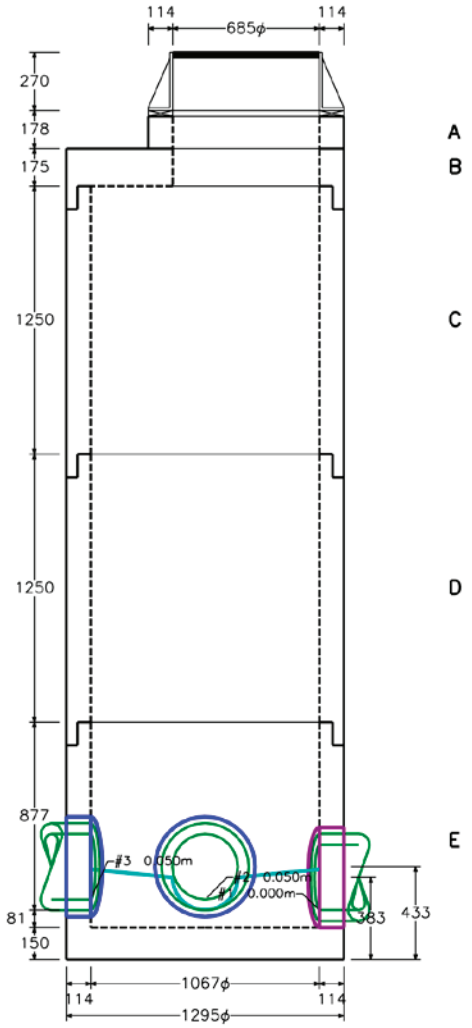

Openings

ID	Center	Pipe	Hole Size	Connector	Angle	Invert
#1	383	300 RCP B	467mm Ø	A-Lok535	0°	0.000
#2	433	300 RCP B	467mm Ø	A-Lok535	90°	0.050
#3	433	300 RCP B	467mm Ø	A-Lok535	180°	0.050

Plan View

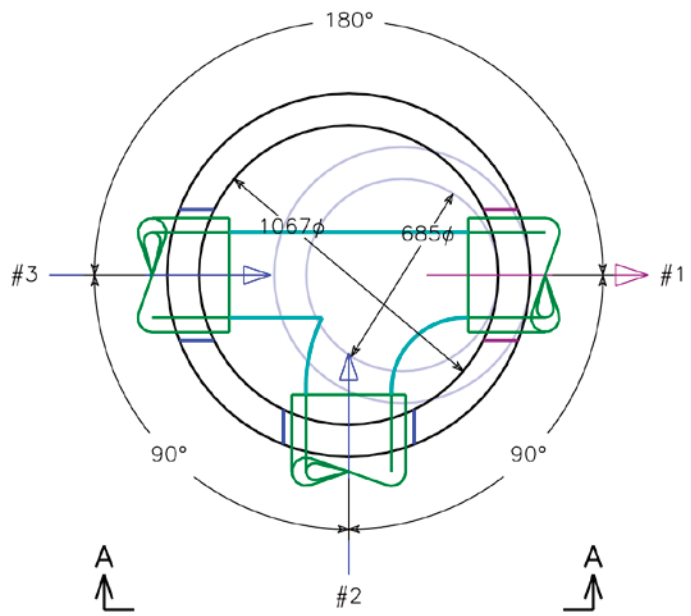

BOM For Stack

ID	Description	Qty	Weight
A	G 150	1	103
B	AGC 175	1	455
C	AI 1250	1	1,269
D	AI 1250	1	1,269
E	APB 1000 BN	1	1,703
	Total Precast (pieces, kgs)	5	4,799

MANHOLE DIAMETER SELECTION GUIDE

1050MM DIAMETER MANHOLES

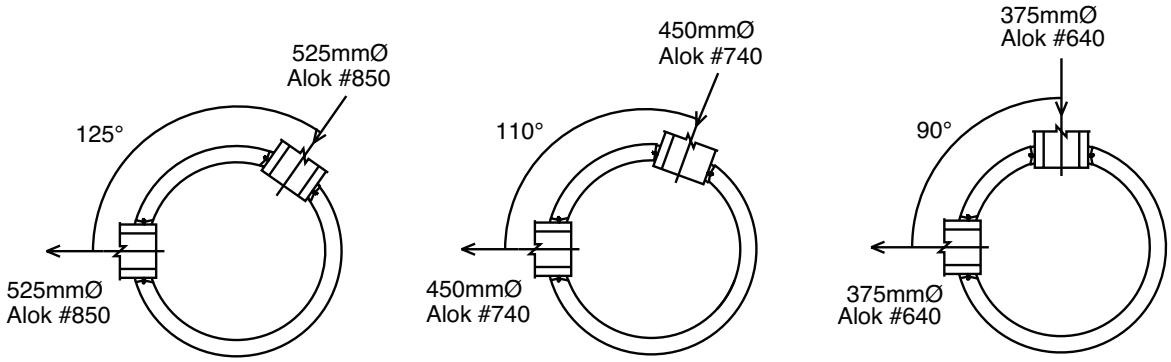

1200MM DIAMETER MANHOLES

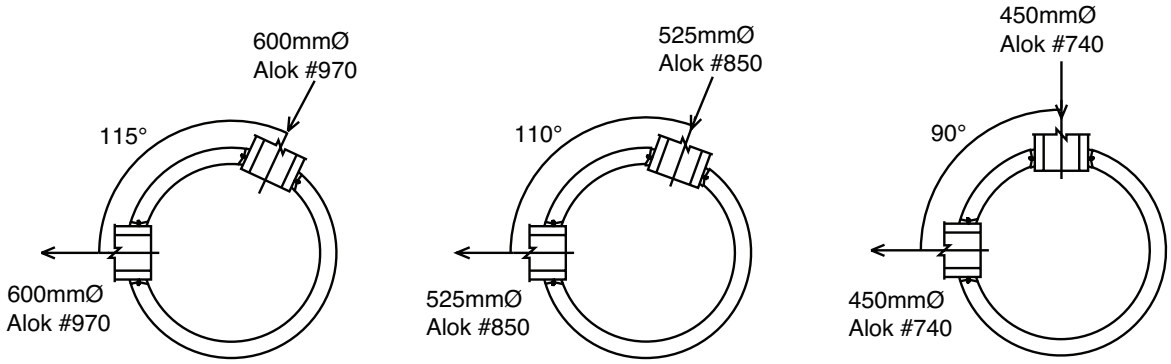

1500MM DIAMETER MANHOLES

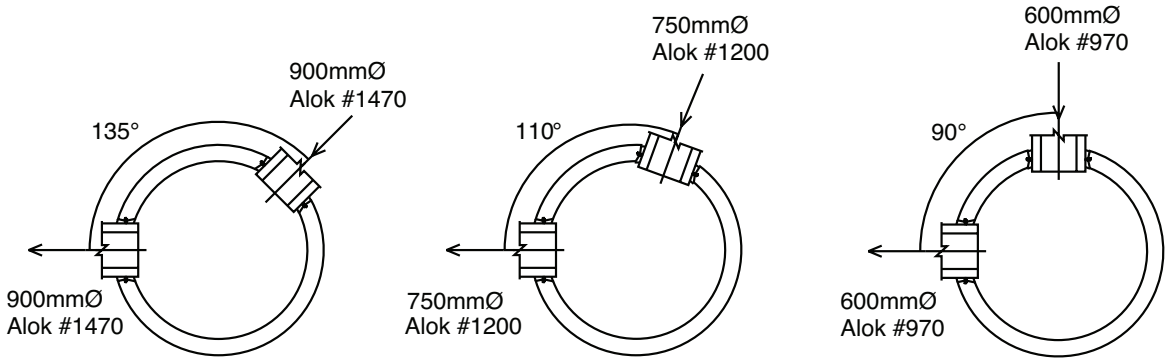

REVISED DECEMBER 24, 2012

MANHOLE DIAMETER SELECTION GUIDE

1800MM DIAMETER MANHOLES

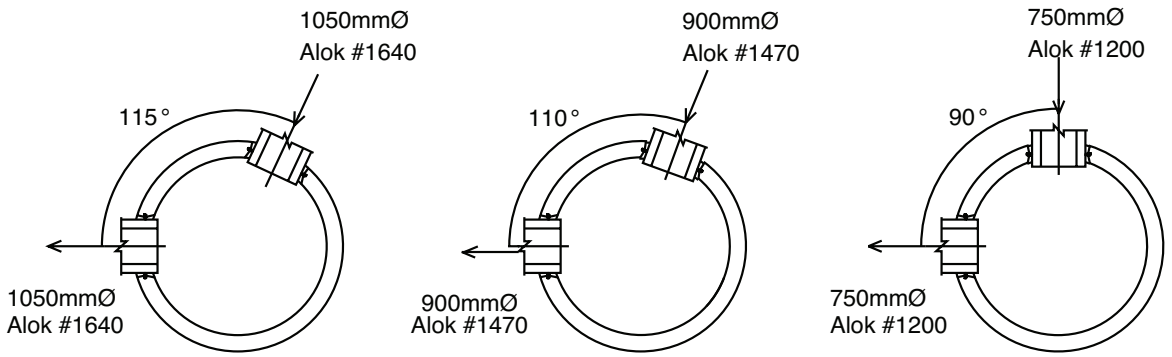

2100MM DIAMETER MANHOLES

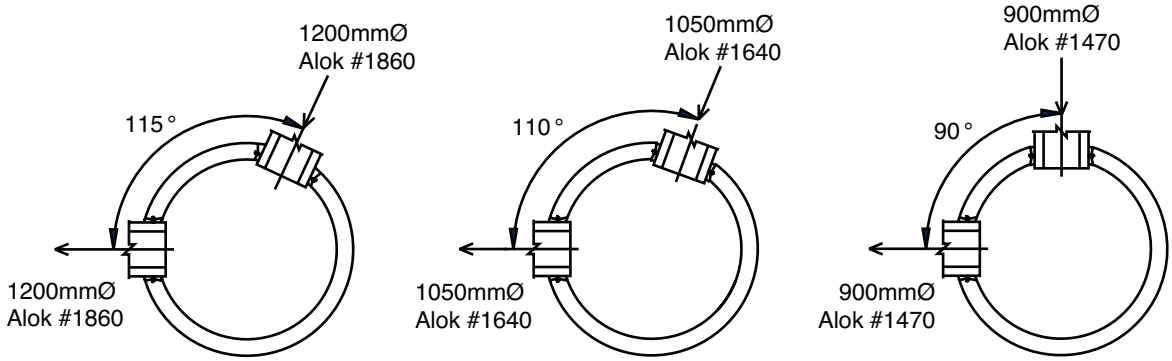

2400MM DIAMETER MANHOLES

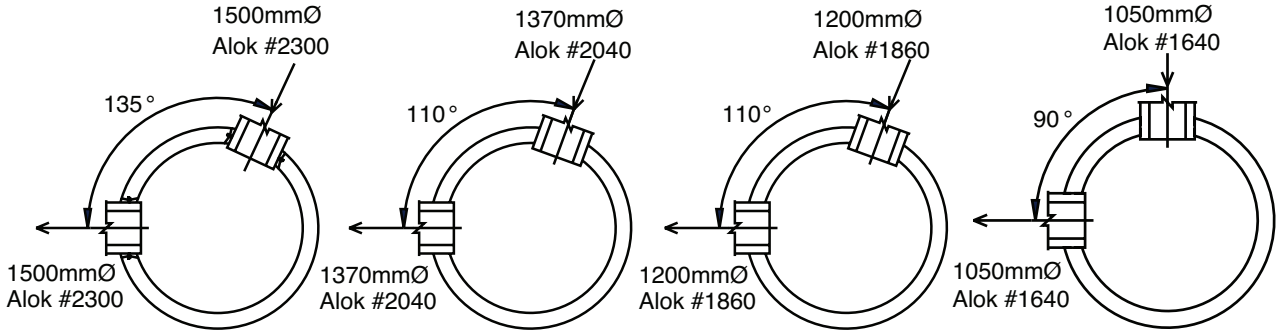

MANHOLE DIAMETER SELECTION GUIDE

3000MM DIAMETER MANHOLES

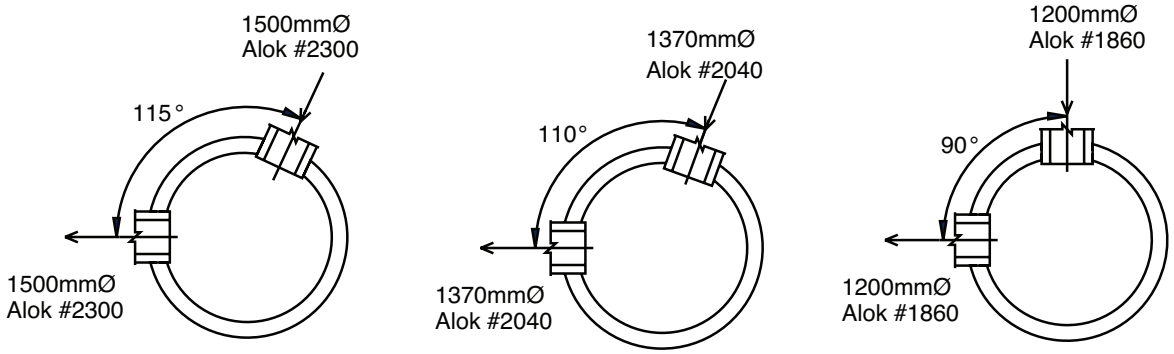

3600MM DIAMETER MANHOLES

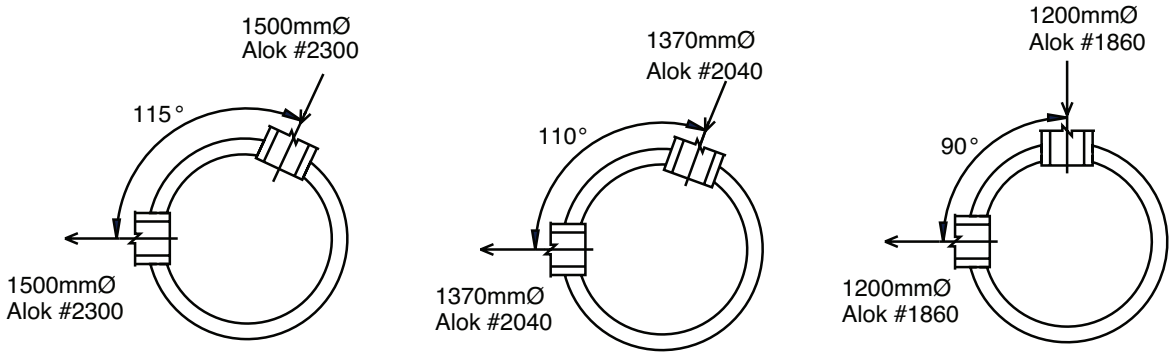

REVISED DECEMBER 24, 2012

STANDARD PIPE CONNECTIONS

A-LOK GASKET CONNECTION	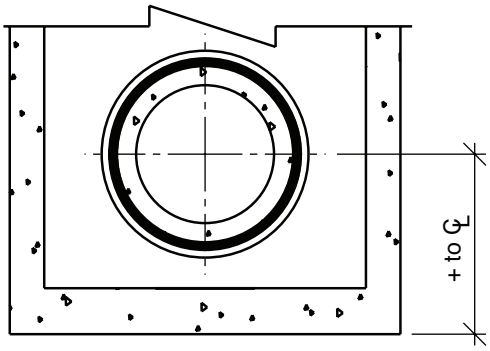
STANDARD HOLE W/GROUTED CONNECTION	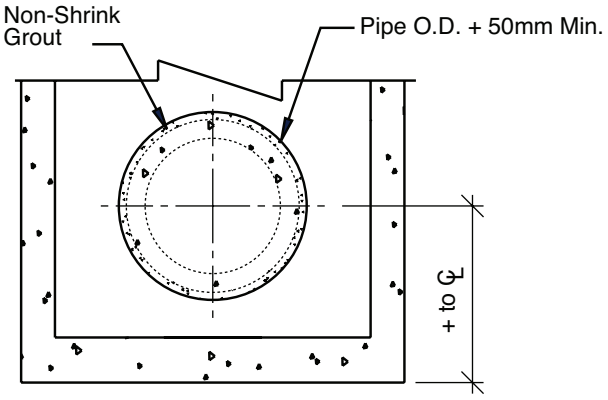
DOGHOUSE OPENING W/ GROUTED CONNECTION	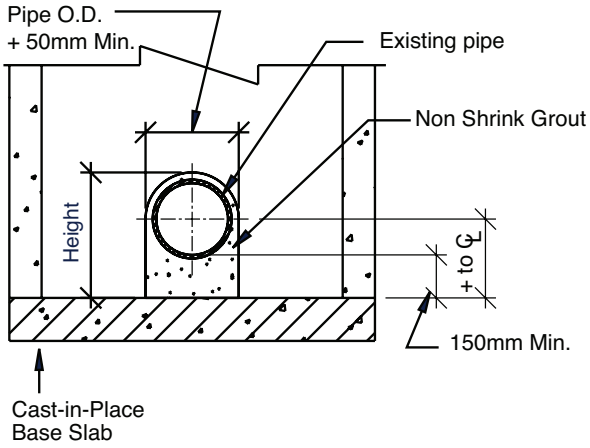

TYPICAL MONO BASE

Wall, bottom, and benching cast as a single unit. Mono Bases are designed to provide cost efficiencies in standard sanitary sewer applications. Where possible, designers should specify mono bases.

Inside Diameter: 1067mm
Wall Thickness: 114mm
Drop across Manhole: 38mm

Available with in-wall A-LOK gasket connection only.

Manufactured for the following nominal pipe sizes:

- 200mm PVC SDR 35
- 250mm PVC SDR 35

Base Section: APB 500 Mono
Laid Height (mm): 500
Weight (kg): 1370

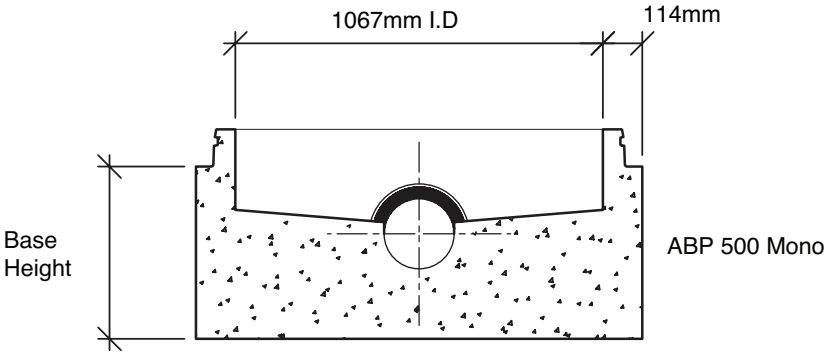

REVISED DECEMBER 24, 2012

TYPICAL 1050-3600mm DIAMETER MANHOLE BASE DETAILS

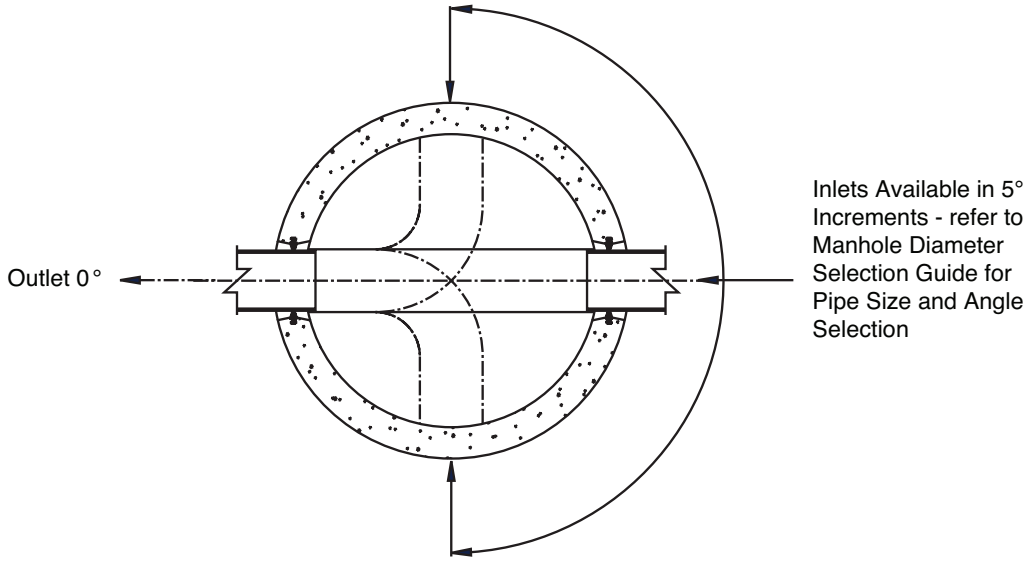

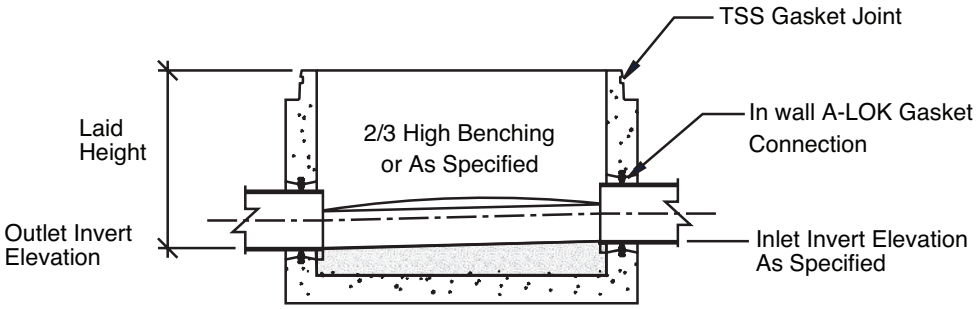

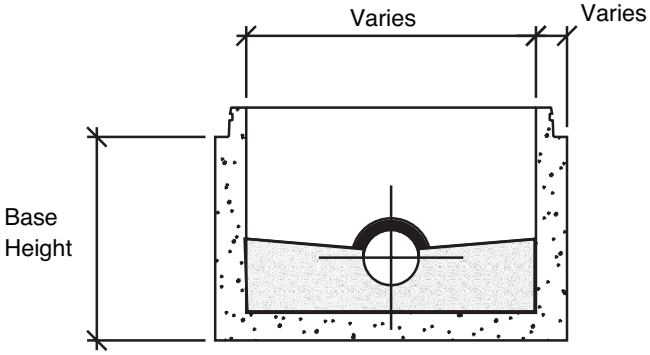

GRADE ADJUSTMENT RINGS

G SERIES 685MM ID/913MM OD

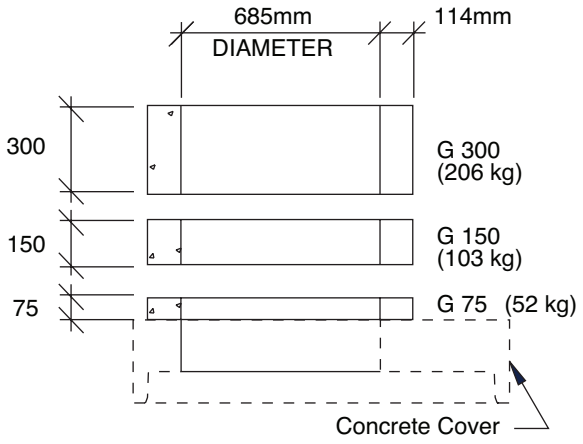

Grade Rings are used to adjust the top elevation of the cast iron or steel frame and cover to the finished grade of the roadway.

BUTYL SEALANT joint material or TSS Gaskets are available to provide a watertight joint between the cover and the grade ring section.

H SERIES 750MM ID/930MM OD (BELL & SPIGOT)

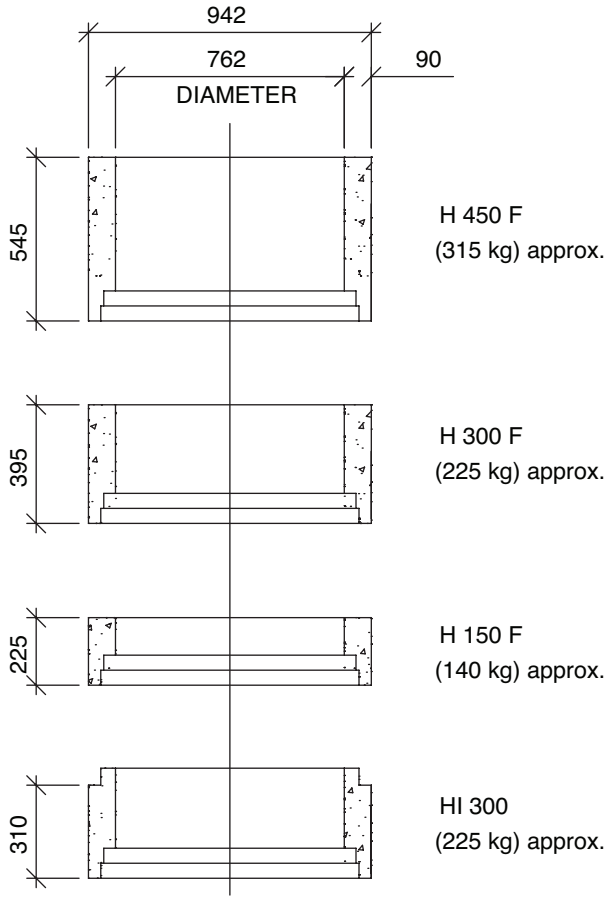

REVISED DECEMBER 24, 2012

GRADE ADJUSTMENT RINGS

HR SERIES 685MM ID/1059MM OD

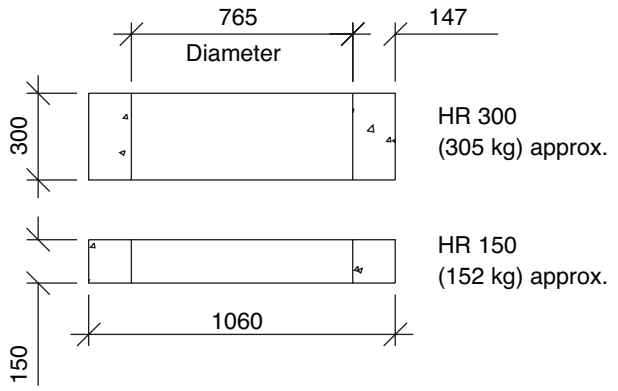

F SERIES 900MM ID/1200MM OD

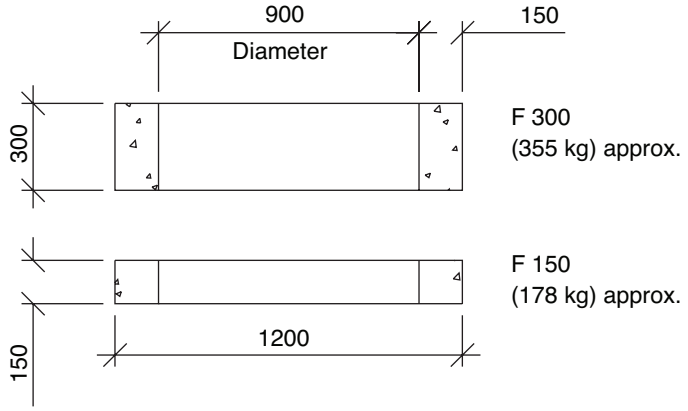

SQGR SERIES 610MM ID/840MM OD

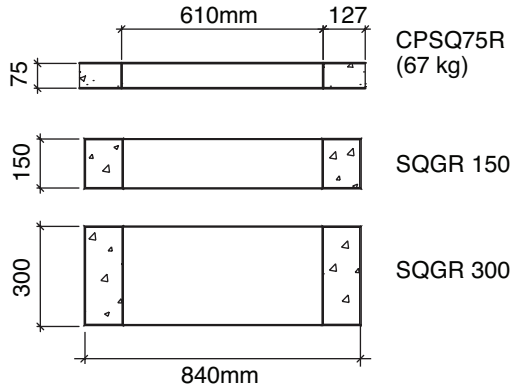

TYPICAL 1050mm DIAMETER FLAT TOP MANHOLE

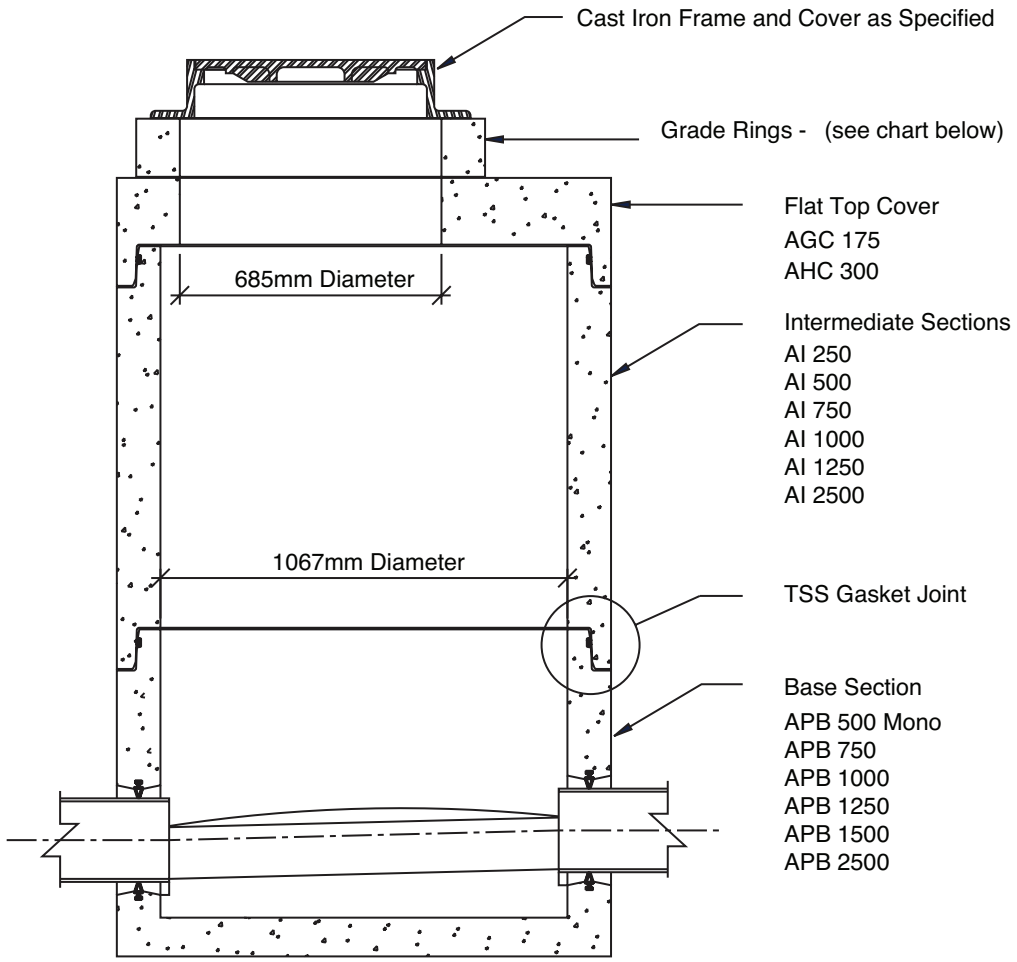

Cover Type	Grade Ring
AGC 175	G 75 G 150 G 300
AHC 300	H 300 F H 150 F HI 300 H 450 F

REVISED DECEMBER 24, 2012

TYPICAL 1050mm DIAMETER CONE TOP MANHOLE

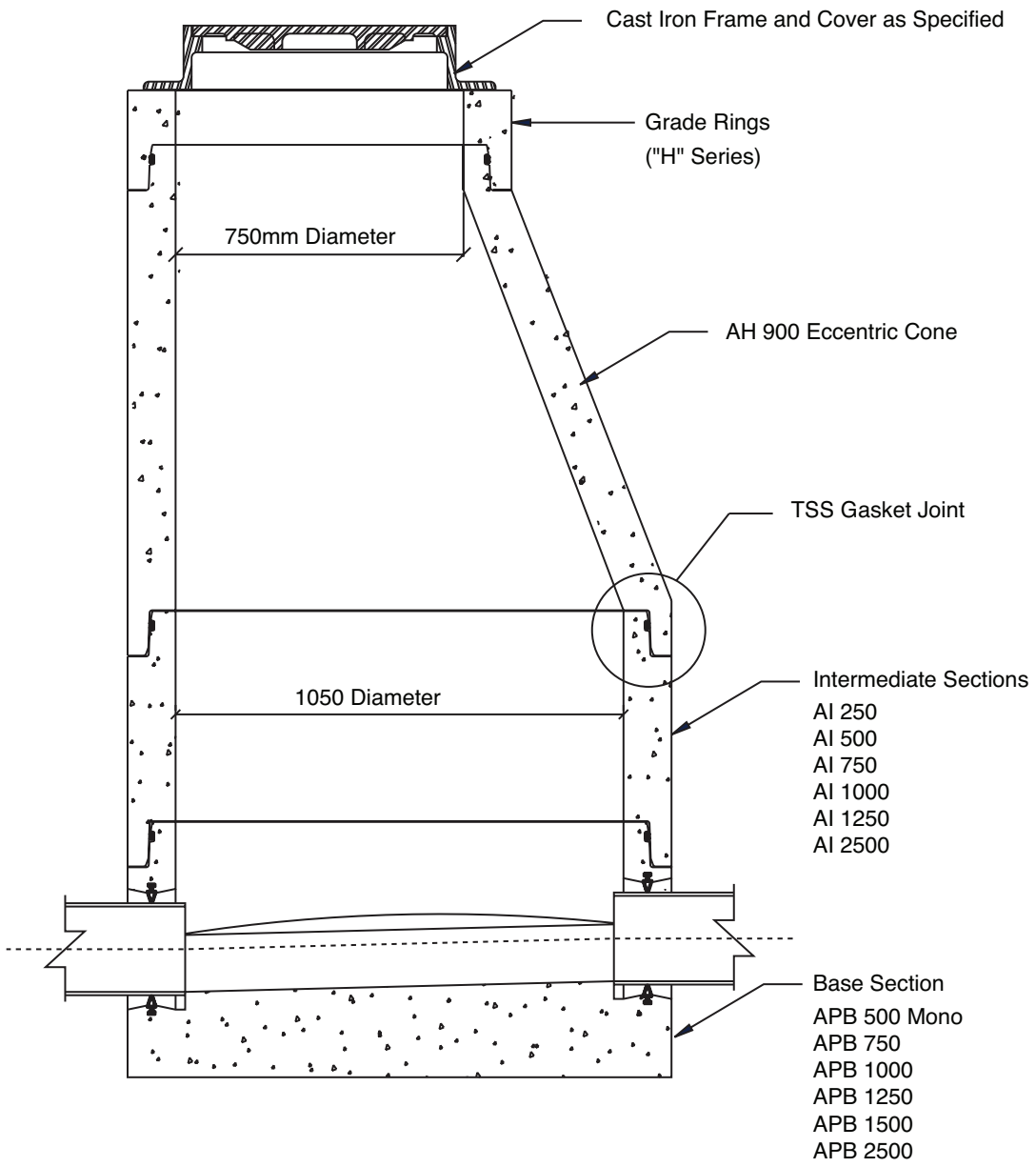

TYPICAL PRE-BENCHED BASE

Wall and bottom cast as a single unit. Factory benching placed to suit size and location.
Also available without benching. Specify "Bottom Only".

Inside Diameter: 1067mm
Wall Thickness: 114mm

Maximum Pipe Size: c/w A-LOK gasket connection - 525mm concrete

Base Section	Base Height mm	*Laid Height mm	Weight Kg
APB 750	750 mm	640 mm	1270 kg
APB 1000	1000 mm	890 mm	1520 kg
APB 1250	1250 mm	1140 mm	1770 kg
APB 1500	1500 mm	1390 mm	2020 kg
APB 2500	2500 mm	2390 mm	2796 kg
* Laid Height estimate only. Dependant on pipe size and type.			

REVISED DECEMBER 24, 2012

1050MM DIAMETER MANHOLE SECTIONS AND ECCENTRIC CONE TOPS

ECCENTRIC CONE AH 900:

Inside Diameter:	1067mm
Wall Thickness:	114mm
Laid Height:	900mm
Weight:	1000kg

BOTTOM/INTERMEDIATE SECTIONS:

Inside Diameter:	1067mm
Wall Thickness:	114mm

Available with in-wall A-LOK gasket or rough cut hole connections. Refer to Diameter Selection detail, for pipe size criteria.

Intermediate Section	*Laid Height mm	Weight Kg	Base Section	*Laid Height mm	Weight Kg
AI 250	250	254	AB 500	500	493
AI 500	500	493	AB 750	750	766
AI 750	750	766	AB 1000	1000	1021
AI 1000	1000	1021	AB 1250	1250	1276
AI 1250	1250	1276			

TYPICAL DETAILS FOR 1050mmØ ECCENTRIC CONES AND MANHOLE SECTIONS

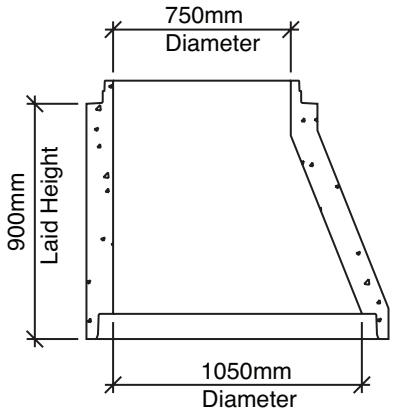

ECCENTRIC CONE AH 900
(Uses "H" Series Grade Rings)

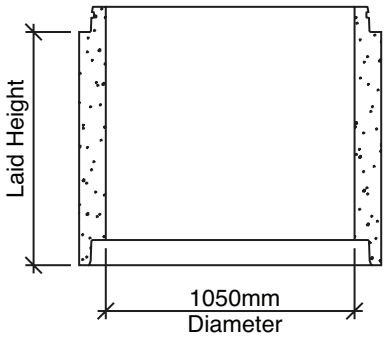

TYPICAL INTERMEDIATE
(AI) SECTION

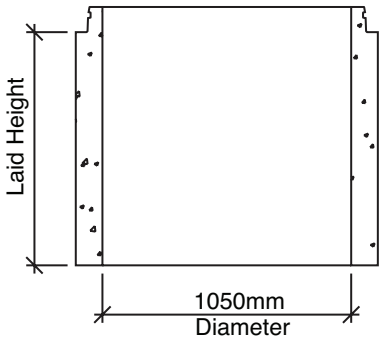

TYPICAL BOTTOM
(AB) SECTION

1050mm FLAT TOP CONCRETE COVERS

AGC 175
Laid Height = 175mm
Weight = 433kg
(Uses "G" Series Grade Rings)

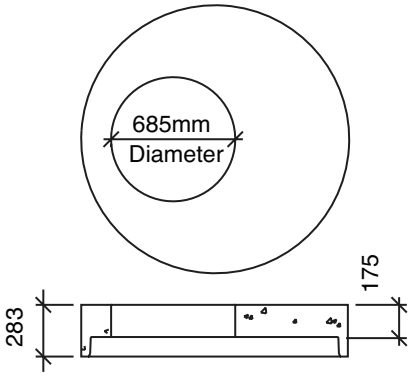

AGC 175 SP
Laid Height = 175mm
Weight = 420kg

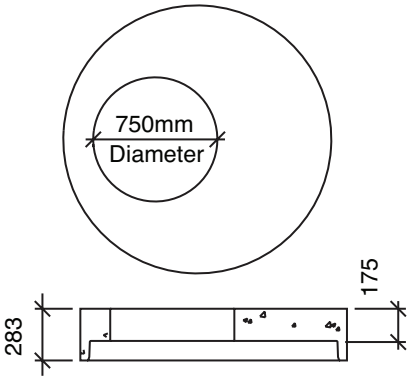

AGC 450
Laid Height = 450mm
Weight = 876kg

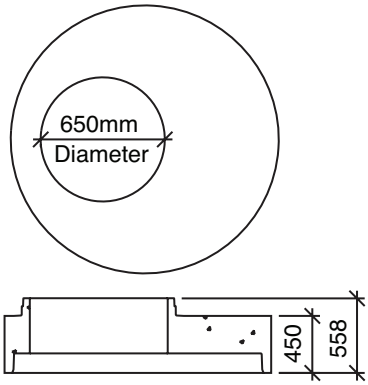

CPC 175
Laid Height = 175mm
Weight = 438kg
(Uses "SQ" Series Grade Rings)

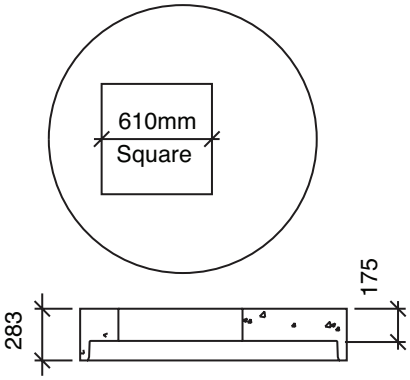

AHC 300
Laid Height = 300mm
Weight = 655kg
(Uses "H" Series Grade Rings)

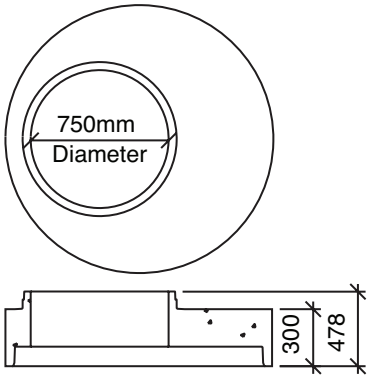

REVISED DECEMBER 24, 2012

TYPICAL 1200mm DIAMETER FLAT TOP MANHOLE

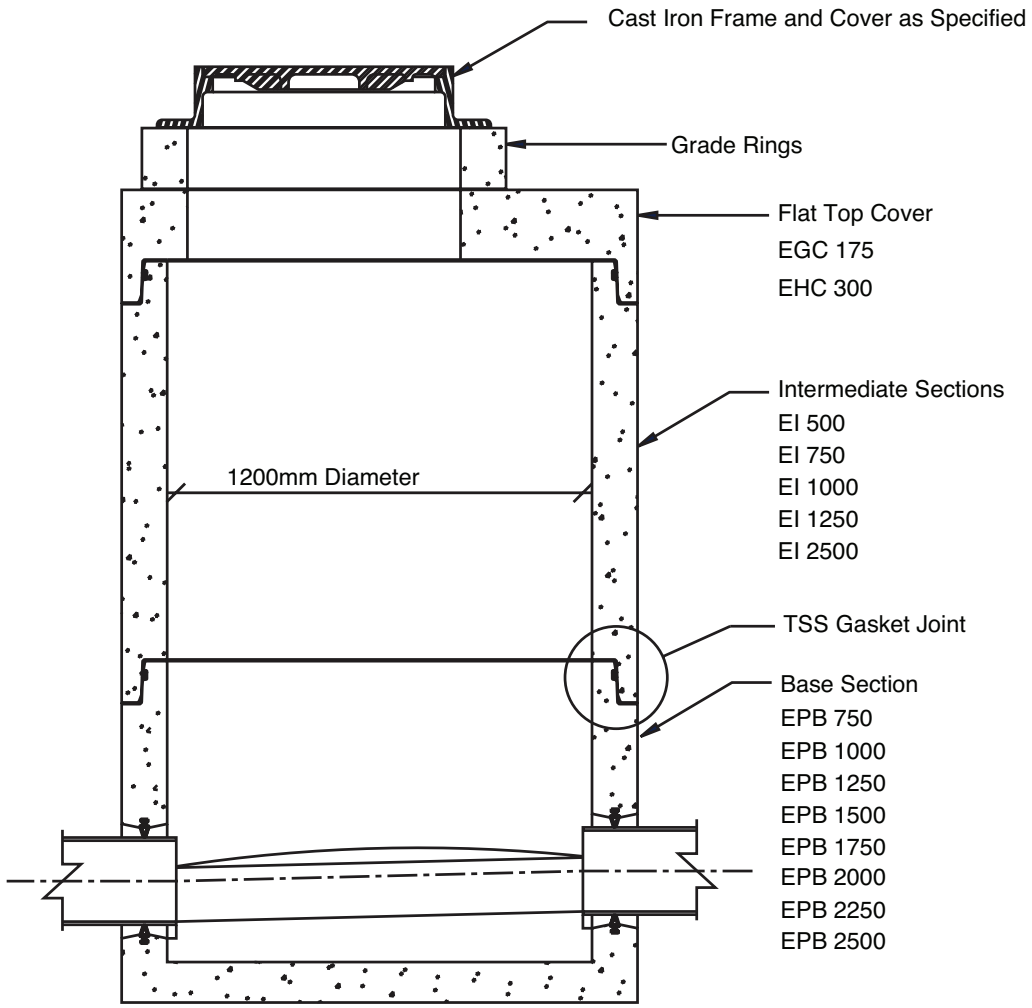

TYPICAL PRE-BENCHED BASE

Wall and bottom cast as a single unit. Factory benching placed to suit pipe size and location.

Also available without benching. Specify "Bottom Only".

Inside Diameter: 1219mm
Wall Thickness: 127mm

Base Section	Base Height	*Laid Height mm	Weight Kg
EPB 750	740 mm	653 mm	1540 kg
EPB 1000	1000 mm	885 mm	1865 kg
EPB 1250	1250 mm	1140 mm	2190 kg
EPB 1500	1500 mm	1410 mm	3138 kg
EPB 1750	1750 mm	1660 mm	3514 kg
EPB 2000	2000 mm	1910 mm	3890 kg
EPB 2250	2250 mm	2160 mm	4266 kg
EPB 2500	2500 mm	2410 mm	4641 kg

* Laid Height estimate only. Dependant on pipe size and type.

REVISED DECEMBER 24, 2012

TYPICAL DETAILS FOR 1200mmØ MANHOLE SECTIONS AND TRANSITION CONE SECTIONS

TYPICAL INTERMEDIATE (EI) SECTION

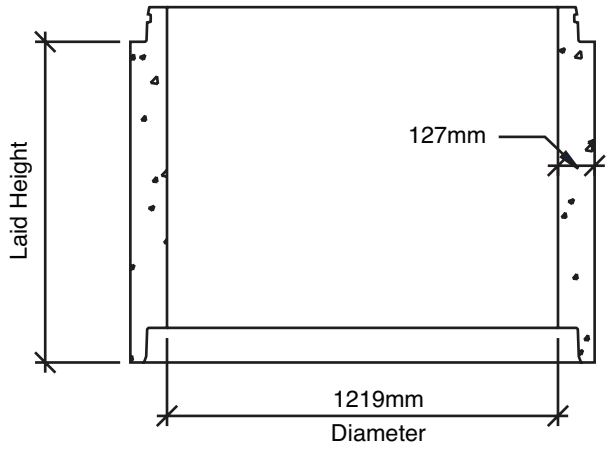

TYPICAL BOTTOM (EB) SECTION

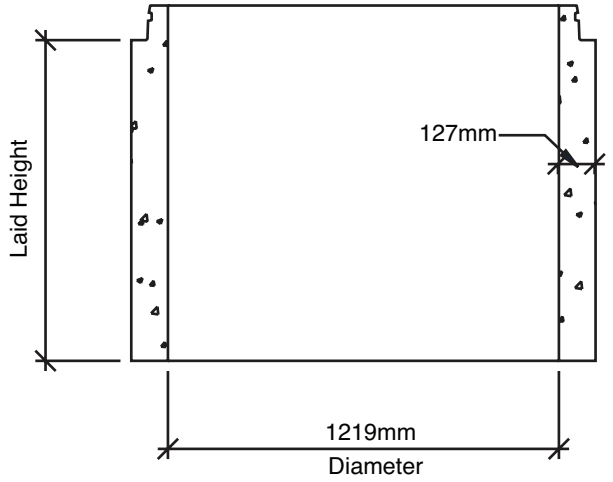

1200MM DIAMETER MANHOLE SECTIONS AND TRANSITION CONES

BOTTOM/INTERMEDIATE SECTIONS:
Inside Diameter: 1219mm
Wall Thickness: 127mm

Available with in-wall A-LOK gasket or rough cut inlet connections.
Refer to Diameter Selection Detail page for pipe size criteria.

Intermediate Section	*Laid Height mm	Weight Kg
EI 500	500	645
EI 750	750	968
EI 1000	1000	1290
EI 1250	1250	1613
EI 2500	2500	3226

Base Section	*Laid Height mm	Weight Kg
EB 500	500	645
EB 750	750	968
EB 1000	1000	1290
EB 1250	1250	1613
EB 2500	2500	3226

REVISED DECEMBER 24, 2012

1200mm DIAMETER FLAT TOP COVERS

EGC 175
Laid Height = 175mm
Weight = 672kg
(Uses "G" Series Grade Rings)

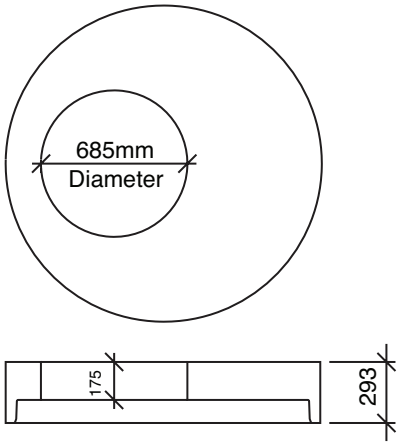

EGC 175SP
Laid Height = 175mm
Weight = 672kg
(Uses "SP" Series Grade Rings)

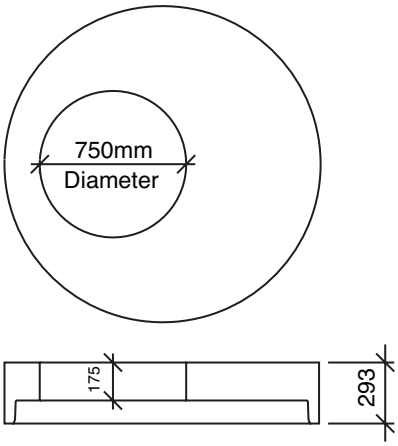

EPC 175
Laid Height = 175mm
Weight = 672kg
(Uses "SQ" Series Grade Rings)

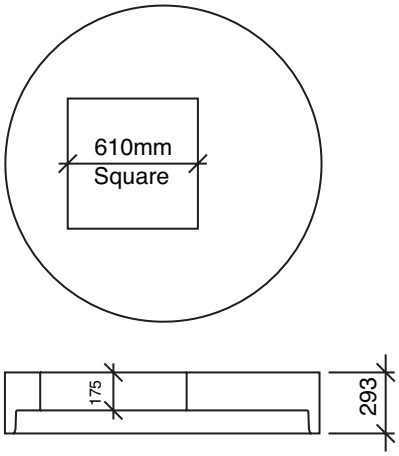

EHC 300
Laid Height = 300mm
Weight = 920kg
(Uses "H" Series Grade Rings)

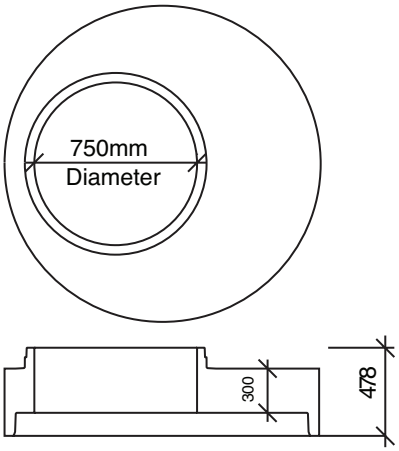

TYPICAL 1500mm-3600mm DIAMETER FLAT TOP MANHOLE

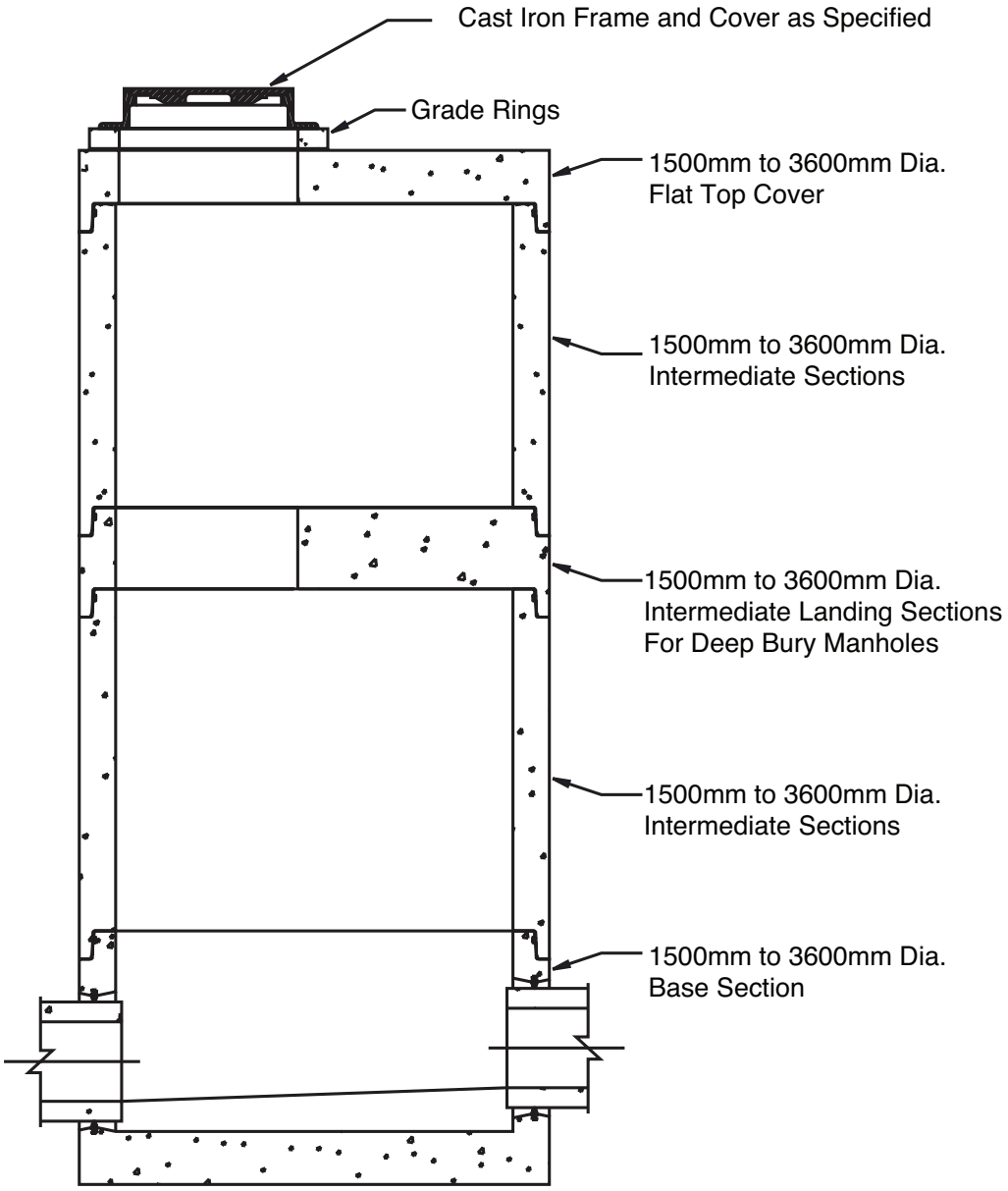

REVISED DECEMBER 24, 2012

TYPICAL 1500mm-3600mm DIAMETER TRANSITION MANHOLE

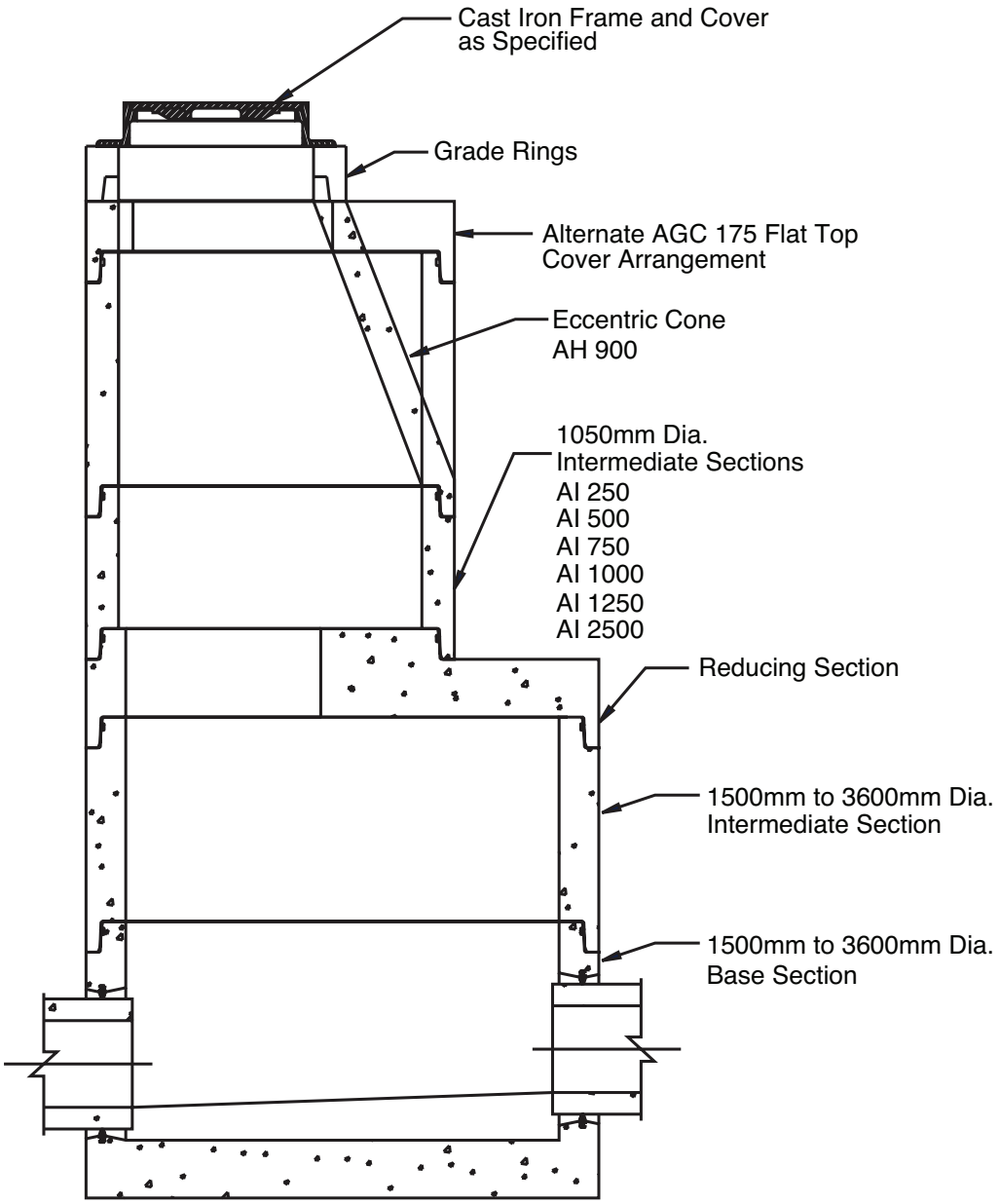

TYPICAL PRE-BENCHED BASE

Walls and bottom cast as single unit. Factory benching placed to suit pipe size and location. (Some sizes may require bottom to be cast in a second pour). Base sections can be manufactured in heights ranging from 500mm to 2550mm. Refer to Diameter Selection Details for maximum pipe sizes.

LARGE DIAMETER MANHOLES						
Manhole Size	Diameter mm	Wall Thickness (mm)		Base Section	Base Height (mm)	Weight Kg*
1500mm	1524	171		KPB 1000	1000	2395
				KPB 1250	1250	2766
				KPB 1500	1500	3139
				KPB 1750	1750	3511
				KPB 2000	2000	3883
				KPB 2250	2250	4255
				KPB 2500	2500	4627
1800mm	1829	197		LPB 1000	1000	4268
				LPB 1250	1250	5018
				LPB 1500	1500	5768
				LPB 1750	1750	6518
				LPB 2000	2000	7268
				LPB 2250	2250	8018
				LPB 2500	2500	8768
2100mm	2134	222	**	RPB 500	500	4986
				RPB 1000	1000	5684
				RPB 1250	1250	6694
				RPB 1500	1500	7704
				RPB 1750	1750	8714
				RPB 2000	2000	9724
				RPB 2250	2250	10734
				RPB 2500	2500	11744
2400mm	2438	248	**	QPB 500	500	4941
				QPB 1000	1000	7246
				QPB 1250	1250	8497
				QPB 1500	1500	9794
				QPB 1750	1750	10456
				QPB 2000	2000	11481
				QPB 2250	2250	12506
				QPB 2550	2550	14737

REVISED DECEMBER 24, 2012

TYPICAL PRE-BENCHED BASE

continued...

LARGE DIAMETER MANHOLES						
Manhole Size	Diameter mm	Wall Thickness (mm)		Base Section	Base Height (mm)	Weight Kg*
3000mm	3048	305	***	TPB 300	300	7700
				TPB 1000	1000	7943
				TPB 1500	1500	11115
				TPB 2000	2000	14287
				TPB 2440	2440	17079
3600mm	3658	406		WPB300	300	14000
				WPB1000	1000	26000
				WPB1500	1500	30300
				WPB2000	2000	36519
				WPB2440	2440	41035

* Approximate weights based on bottom only bases (benching volume varies as per requirement, pipe size, etc).

** RPB 500 & QPB 500 Bases are "Mono" style and are fabricated c/w benching.

*** 3000mm bases are fabricated with a separate base slab. See Lift Station section for detail.

TYPICAL DETAILS FOR LARGE DIAMETER INTERMEDIATE AND REDUCING SECTIONS

TYPICAL REDUCING SECTION

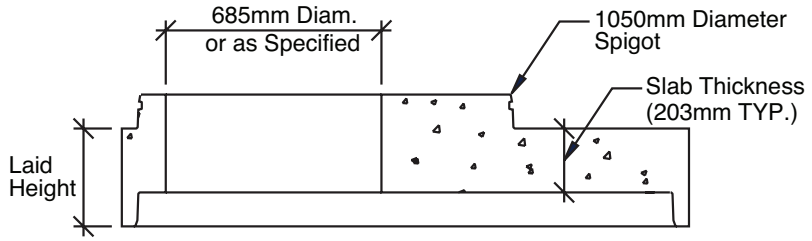

TYPICAL INTERMEDIATE LANDING SECTION

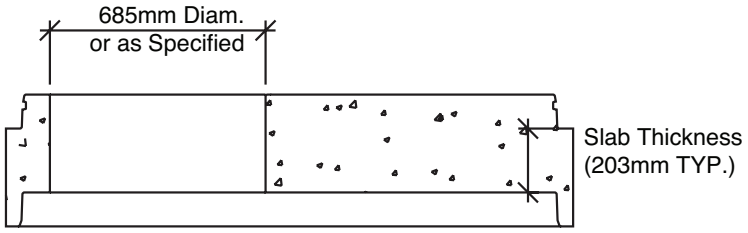

TYPICAL INTERMEDIATE SECTION

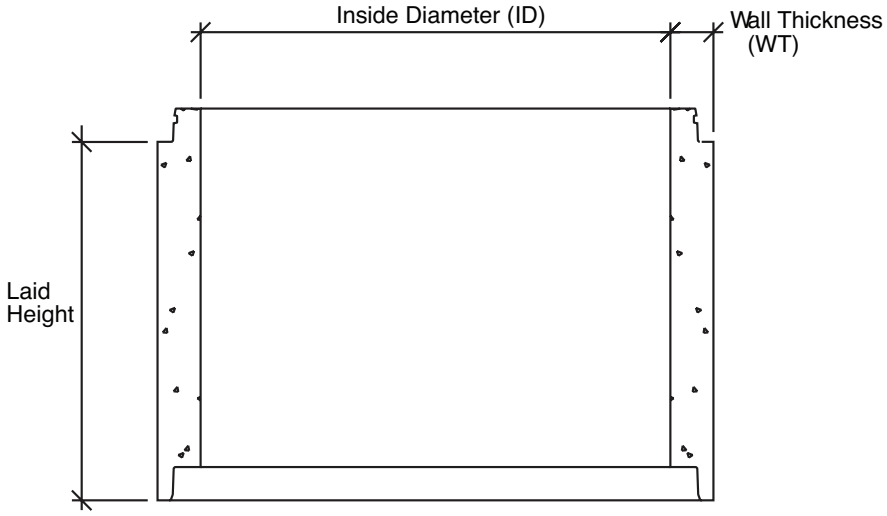

REVISED DECEMBER 24, 2012

TYPICAL INTERMEDIATE SECTIONS LARGE DIAMETER MANHOLES

Intermediate sections are available with in-wall A-LOK gaskets or rough cut hole connections. Refer to the Manhole Diameter Selection details for the pipe size criteria.

1500mm DIA. INTERMEDIATE SECTIONS
Inside Diameter: 1524mm Wall Thickness: 152mm

Intermediate Section	Laid Height mm	Weight Kg
KI 500	500	964
KI 750	750	1445
KI 1000	1000	1927
KI 1250	1250	2409
KI 1500	1500	2891
KI 1750	1750	3373
KI 2000	2000	3855
KI 2250	2250	4337
KI 2500	2500	4818

1800mm DIA. INTERMEDIATE SECTIONS
Inside Diameter: 1829mm Wall Thickness: 197mm

Intermediate Section	Laid Height mm	Weight Kg
LI 500	500	1348
LI 750	750	2021
LI 1000	1000	2695
LI 1250	1250	3369
LI 1500	1500	4043
LI 1750	1750	4717
LI 2000	2000	5391
LI 2250	2250	6065
LI 2500	2500	6738

2100mm DIA. INTERMEDIATE SECTIONS
Inside Diameter: 2134mm Wall Thickness: 222mm

Intermediate Section	Laid Height mm	Weight Kg
RI 750	750	2969
RI 1000	1000	3959
RI 1250	1250	4948
RI 1500	1500	5938
RI 1750	1750	6928
RI 2000	2000	7918
RI 2250	2250	8908
RI 2500	2500	9896

2400mm DIA. INTERMEDIATE SECTIONS
Inside Diameter: 2438mm Wall Thickness: 248mm

Intermediate Section	Laid Height mm	Weight Kg
QI 750	750	3449
QI 1000	1000	4599
QI 1250	1250	5748
QI 1500	1500	6898
QI 1750	1750	8048
QI 2000	2000	9198
QI 2250	2250	10348
QI 2440	2440	11726

3000mm DIA. INTERMEDIATE SECTIONS
Inside Diameter: 3048mm Wall Thickness: 305mm

Intermediate Section	Laid Height mm	Weight Kg
TI 750	750	6400
TI 1000	1000	8500
TI 1250	1250	10600
TI 1500	1500	12800
TI 1750	1750	14900
TI 2000	2000	17100
TI 2250	2250	19200
TI 2440	2440	20500

3600mm DIA. INTERMEDIATE SECTIONS
Inside Diameter: 3658 Wall Thickness: 406

Intermediate Section	Laid Height mm	Weight Kg
WI 1000	1000	12000
WI 1500	1500	16300
WI 2000	2000	22519
WI 2440	2440	27035

LARGE DIAMETER FLAT TOP COVERS
LARGE DIAMETER MANHOLES

(K,L,R,Q) GC 200
TGC 300

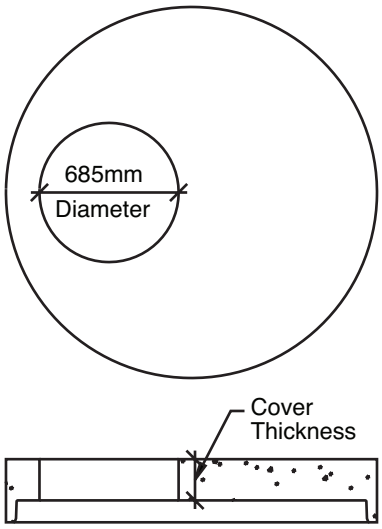

(K,L,R,Q) GC 200 TRANSITIONAL COVER
TGC 300

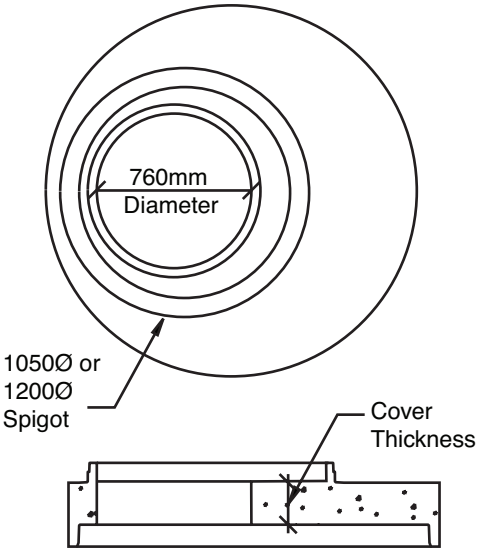

(K,L,R,Q) PC 200
TPC 300

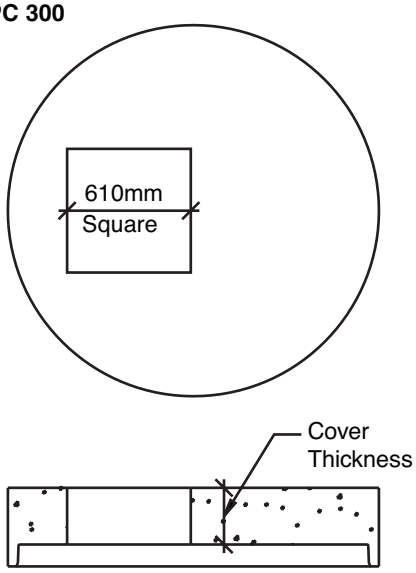

(K,L,R,Q,T)
HC 300

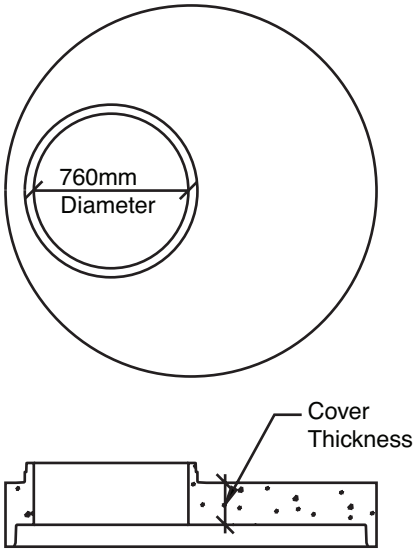

REVISED DECEMBER 24, 2012

TYPICAL FLAT TOP COVERS LARGE DIAMETER MANHOLES

Flat top covers are also available as intermediate landing or reducing sections. All covers produced with the standard access opening as shown. Other configurations available upon request.

1500mm DIAMETER

Flat Top Cover	Cover Thickness mm	Weight Kg
KGC 200	200	1314
KHC 300	300	1644
KPC 200	200	2000

1800mm DIAMETER

Flat Top Cover	Cover Thickness mm	Weight Kg
LGC 200	200	1860
LHC 300	300	2325
LPC 200	200	2900

2100mm DIAMETER

Flat Top Cover	Cover Thickness mm	Weight Kg
RGC 200	200	2359
RHC 300	300	2949
RPC 200	200	3700

2400 DIAMETER

Flat Top Cover	Cover Thickness mm	Weight Kg
QGC 200	200	3403
QHC 300	300	4254
QPC 200	200	5250

3000mm DIAMETER

Flat Top Cover	Cover Thickness mm	Weight Kg
TGC 300	300	7700
THC 300	300	7600
TPC 300	300	7700

3600mm DIAMETER

Flat Top Cover	Cover Thickness mm	Weight Kg
WGC 300	300	14000
WHC 300	300	14000
WPC 300	300	14000

TYPICAL "TEE"-BASE MANHOLE

TYPICAL MANHOLE SECTION

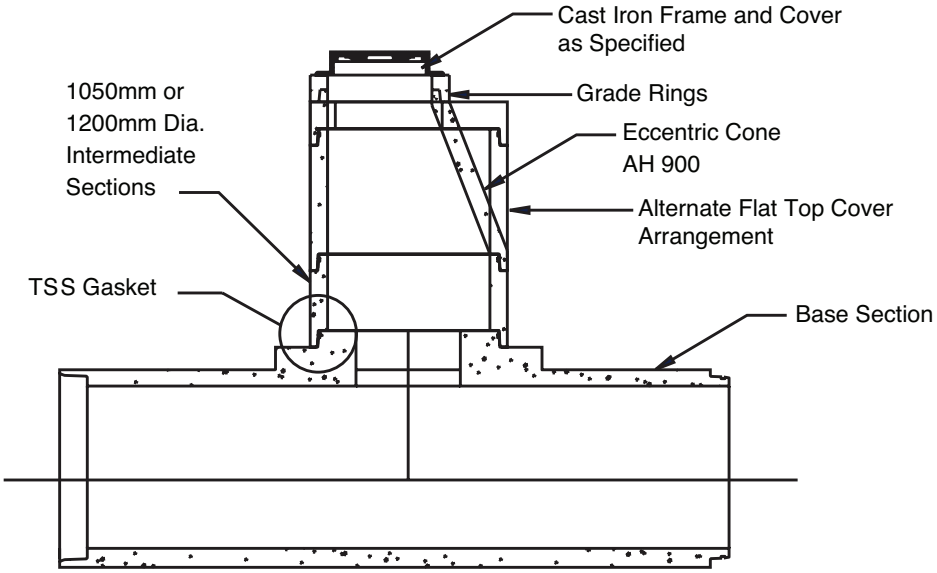

180°TEE BASE CONFIGURATION

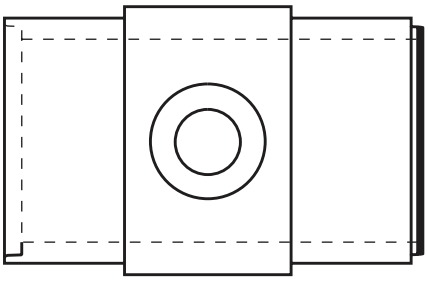

REVISED DECEMBER 24, 2012

TYPICAL "TEE" BASE DETAILS

LONGITUDINAL SECTION

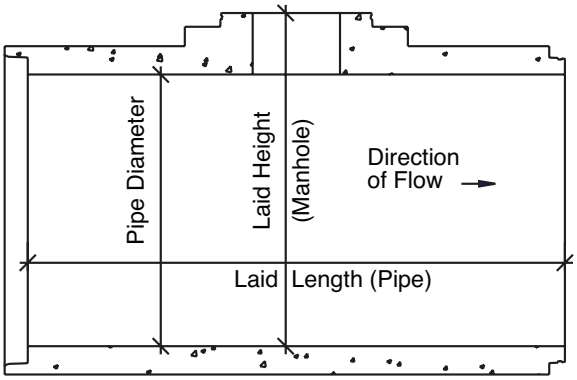

TRANSVERSE SECTION

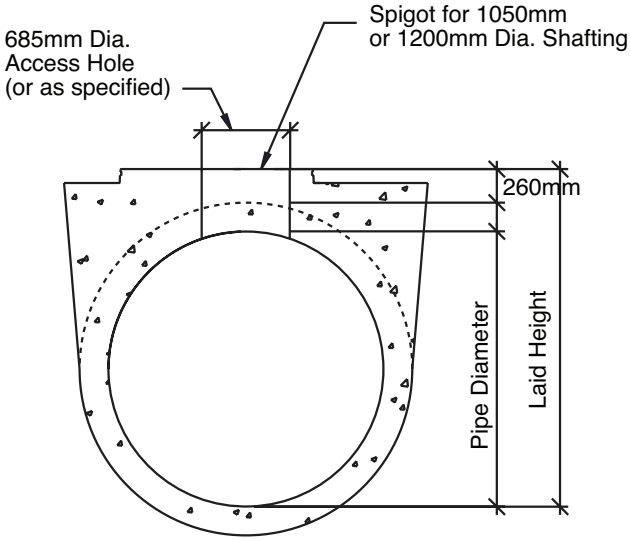

TYPICAL 'TEE'-BASE SECTION

Tee'-Base sections are normally used to provide access to large diameter pipe lines. Generally, slopes are minimal and they have only an inlet and outlet of the same size although smaller inlets may be incorporated in the structure.

They are available in sizes ranging from 600mm to 2400mm diameter concrete pipe. Spigots for 1050mm or 1200mm diameter shafting are cast integral with the base section.

Due to the diverse applications in which they may be utilized, please contact Shaw Precast Solutions for specific information pertaining to your project.

'Tee'-Base Pipe Diameter (mm)	Laid Height mm
600	965
750	1130
900	1315
1050	1460
1200	1625
1500	1955
1800	2305
2100	2635
2400	2965

Weights of 'Tee'-Base Units are available on request.

REVISED DECEMBER 24, 2012

1050-3600mm DIAMETER TYPICAL INTERNAL DROP MANHOLE

STANDARD MANHOLE DETAILS

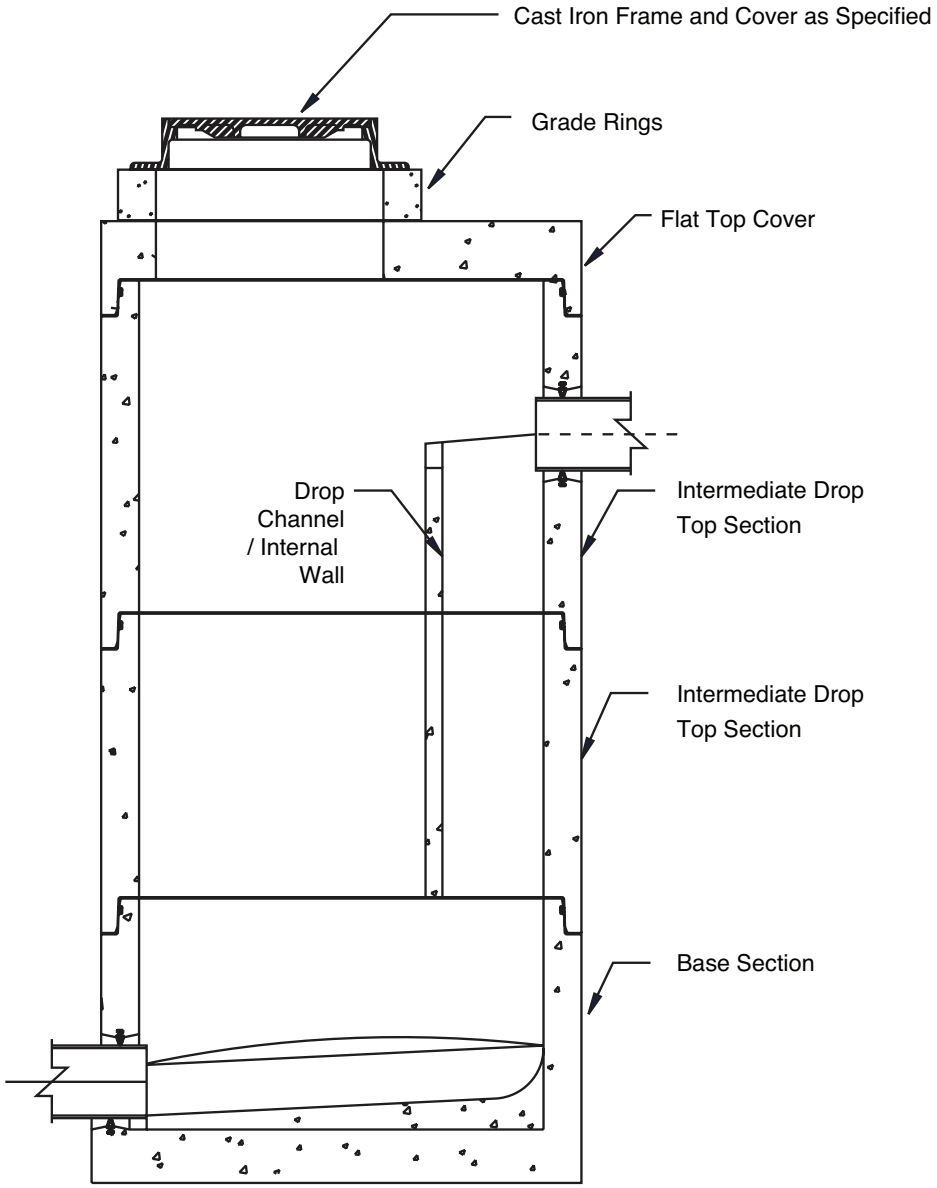

1050-3600mm DIAMETER DROP MANHOLE SECTION DETAILS STANDARD DROP CHANNEL MANHOLE

TYPICAL PLAN	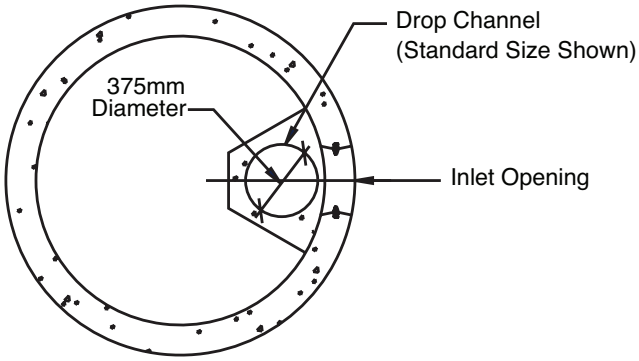
TYPICAL INTERMEDIATE INTERNAL DROP TOP SECTION	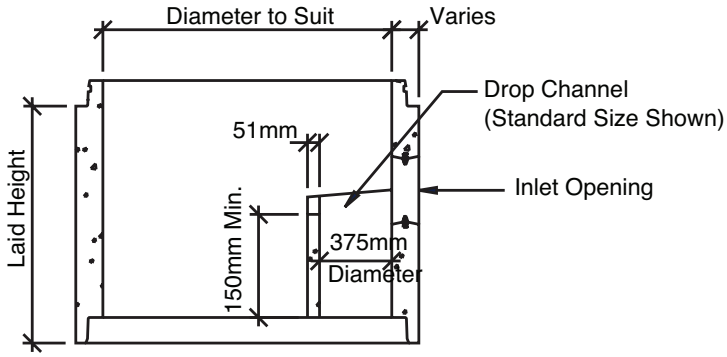
TYPICAL INTERMEDIATE INTERNAL DROP SECTION	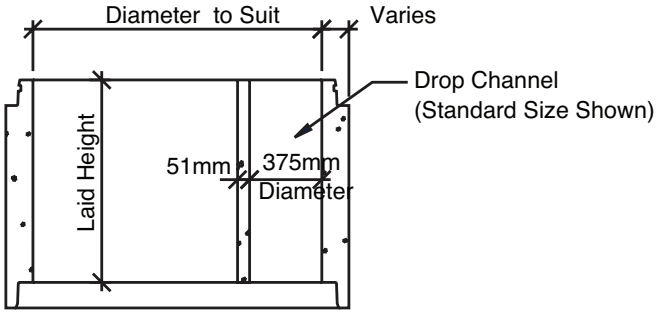

REVISED DECEMBER 24, 2012

1050-3000mm DIAMETER DROP MANHOLE SECTION DETAILS STANDARD INTERNAL WALL MANHOLE

TYPICAL PLAN

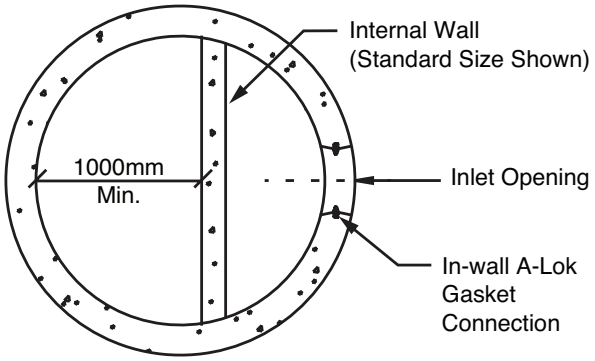

TYPICAL INTERMEDIATE INTERNAL WALL TOP SECTION

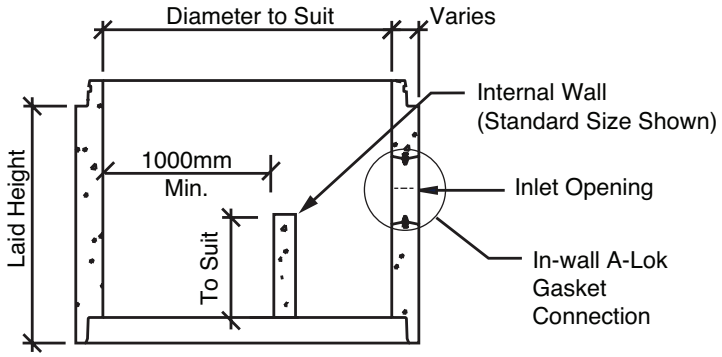

TYPICAL INTERMEDIATE INTERNAL WALL SECTION